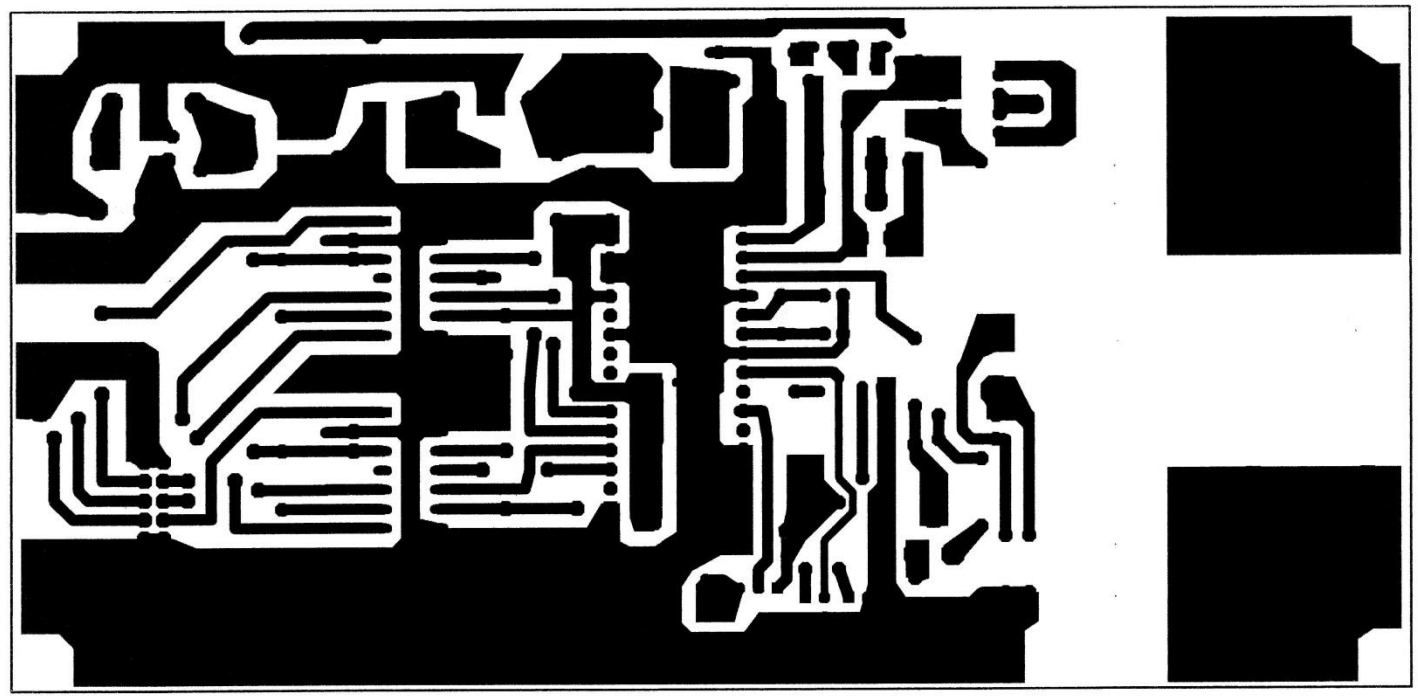

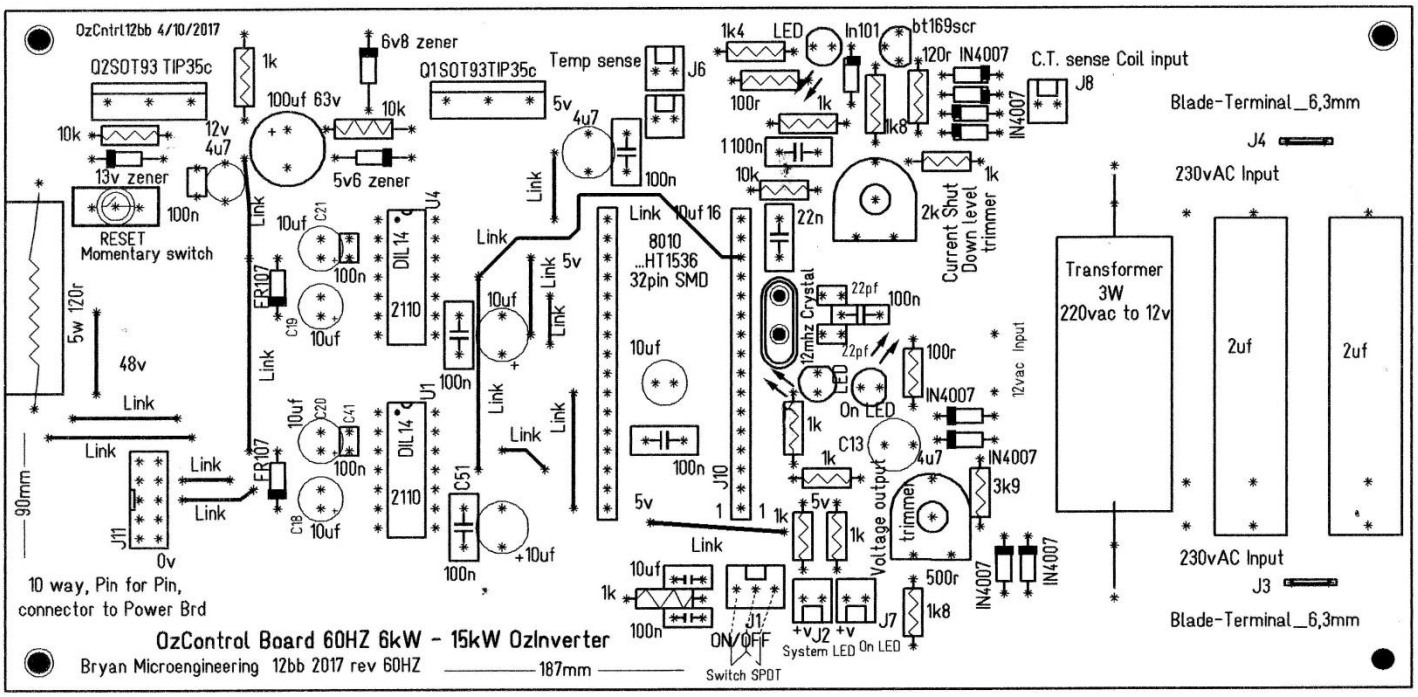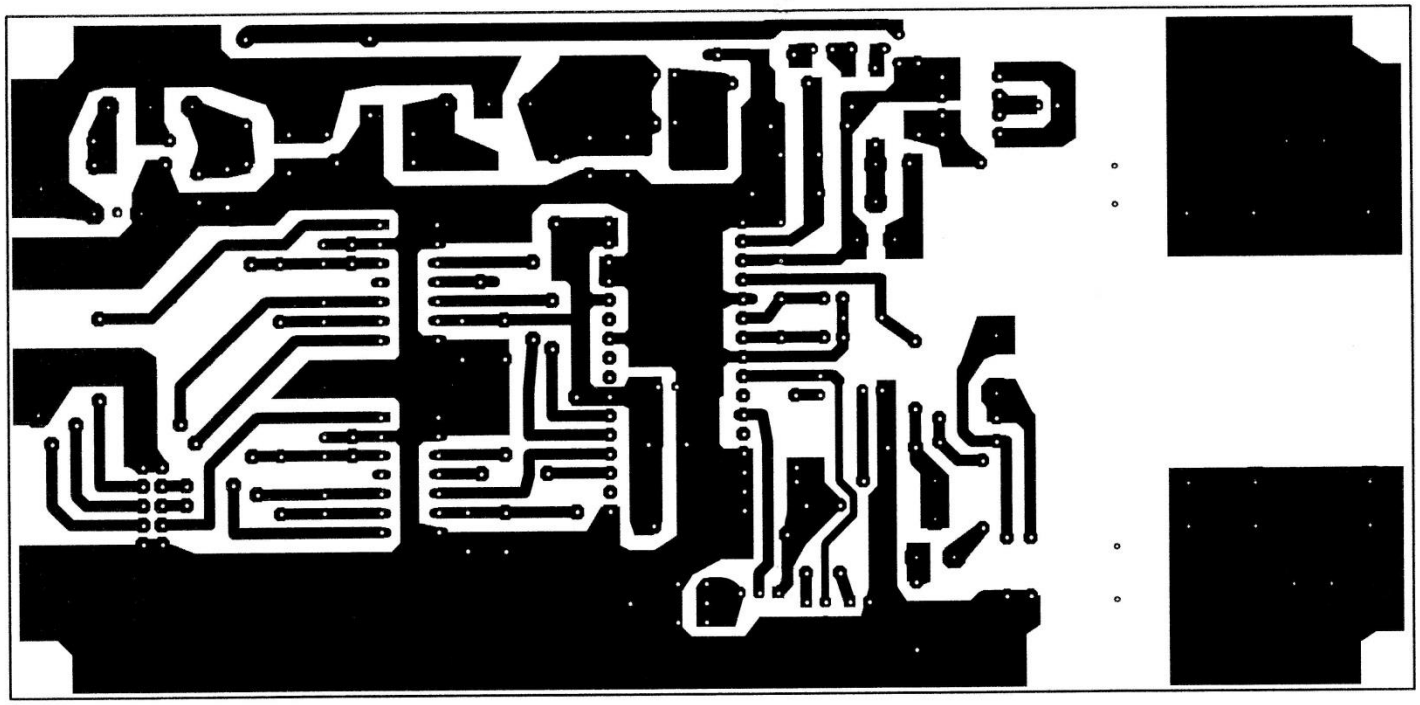
OzCntrl12bb 4/10/2017
Q2SOT93 TIP35c
Q1SOT93TIP35c
6v8 zener
100uf 63v
5v6 zener
13v zener
RESET
Momentary switch
Temp sense
J6
1k4
LED
In101
bt169scr
120r IN4007
C.T. sense Coil input
J8
Blade-Terminal_6,3mm
J4
230vAC Input
Current Shut
Down level
trimmer
8010
...HT1536
32pin SMD
12mhz Crystal
22pf
On LED
Transformer
3W
220vac to 12v
2uf
2uf
12vac Input
Voltage output
trimmer
5w 120r
48v
90mm
J11
0v
10 way, Pin for Pin,
connector to Power Brd
J1
ON/OFF
Switch SPDT
J2
System LED
J7
On LED
J3
Blade-Terminal_6,3mm
OzControl Board 60HZ 6kW - 15kW OzInverter
Bryan Microengineering 12bb 2017 rev 60HZ
187mm