j60108
CURRENT
VOLTAGE

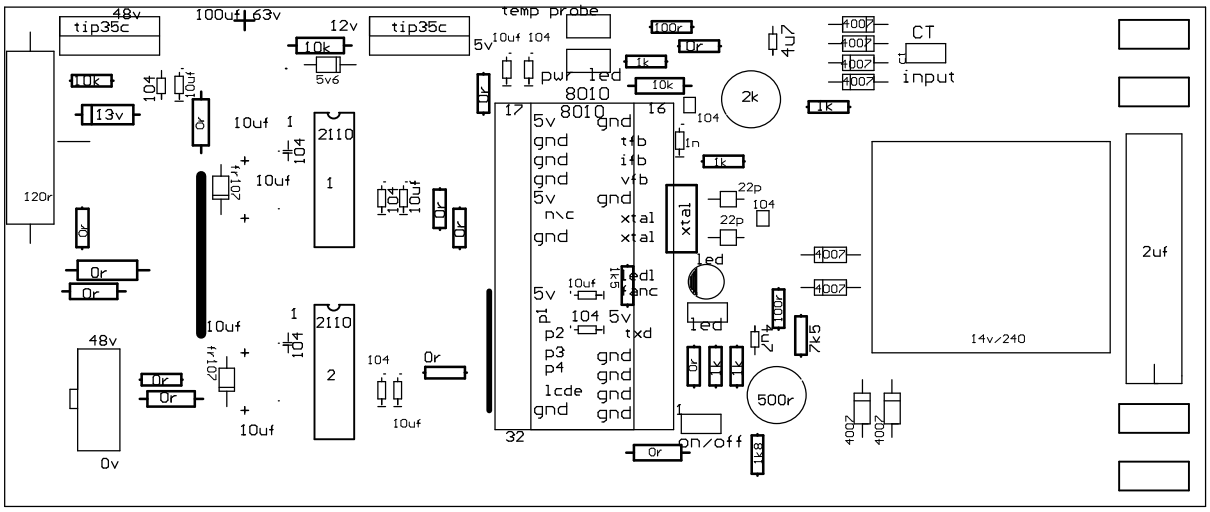
48v
tip35c
100uf 63v
12v
tip35c
temp probe
10k
5v6
5v
10uf 104
100r
0r
4u7
400?
CT
input
1k
pwr led
10k
2k
10k
13v
104
10uf
0r
10uf
1
2110
1
8010
17
16
5v
gnd
gnd
gnd
gnd
5v
n\c
gnd
gnd
tfb
ifb
vfb
gnd
xtal
xtal
104
1n
1k
22p
104
22p
xtal
120r
0r
0r
0r
0r
10uf
104
10uf
0r
0r
led
led
5v
p1
p2
p3
p4
lcde
gnd
10uf
104
5v
rxd
gnd
gnd
gnd
gnd
led
400?
400?
2uf
14v/240
48v
0r
0r
10uf
104
2110
2
104
10uf
0r
0r
1k
1k
2u7
7k5
500r
400?
400?
0v
32
1
on/off
0r
1k8