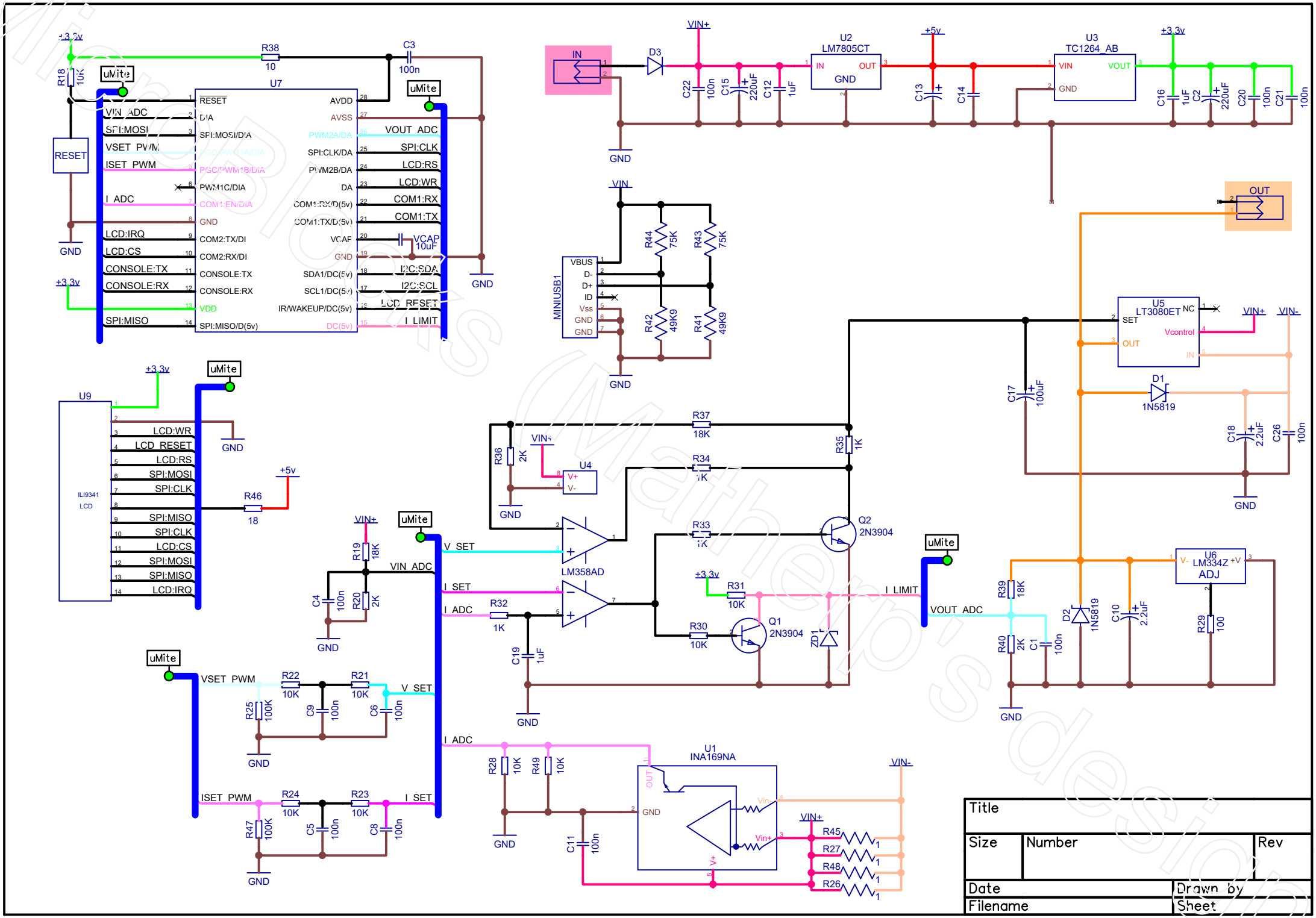
U7
RESET
VIN_ADC
SPI:MOSI
VSET_PWM
ISET_PWM
I_ADC
LCD:IRQ
LCD:CS
CONSOLE:TX
CONSOLE:RX
SPI:MISO
AVDD
AVSS
VOUT_ADC
SPI:CLK
LCD:RS
LCD:WR
COM1:RX
COM1:TX
VCAP
LCD_RESET
I_LIMIT
U2
LM7805CT
U3
TC1264_AB
U5
LT3080ET
U6
LM334Z
ADJ
U4
LM358AD
U1
INA169NA
U9
ILI9341
LCD
MINIUSB1
Q1
2N3904
Q2
2N3904
D1
1N5819
D2
1N5819
D3
ZD1
VIN+
VIN-
+3.3v
+5v
GND
uMite
IN
OUT
Title
Size
Number
Rev
Date
Drawn by
Filename
Sheet