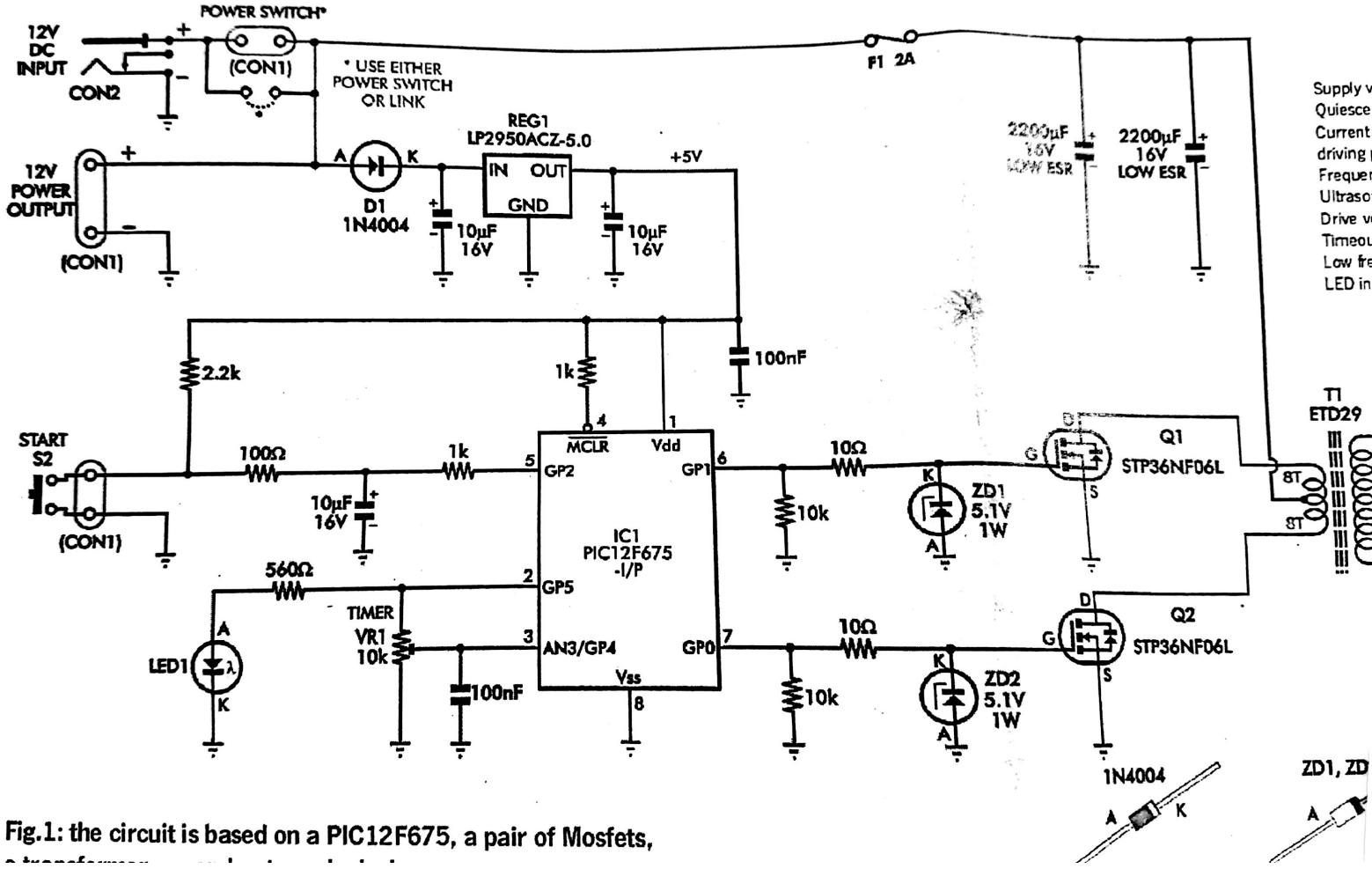

Fig.1: the circuit is based on a PIC12F675, a pair of Mosfets,