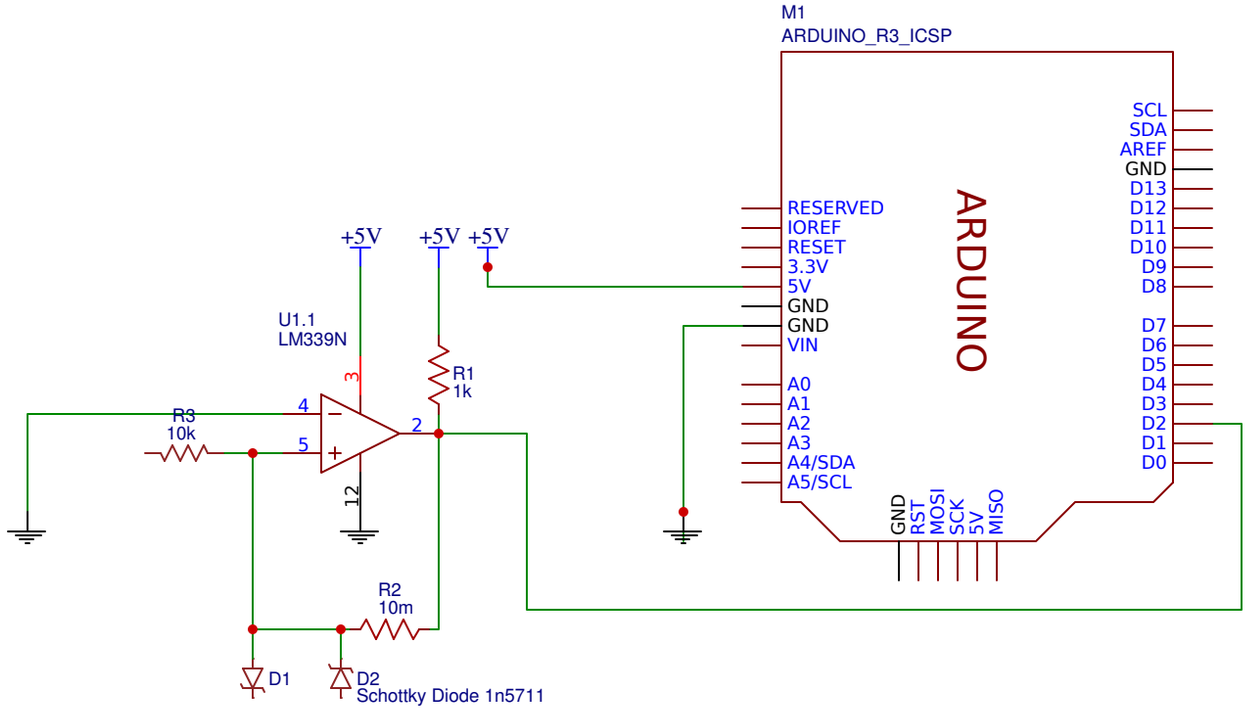

Unused OpAmp Terminations

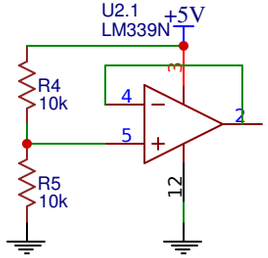

TITLE: New Schematic	REV: 1.0
Date: 2018-03-30	Sheet: 1/1
EasyEDA V5.3.14	Drawn By: Your Name