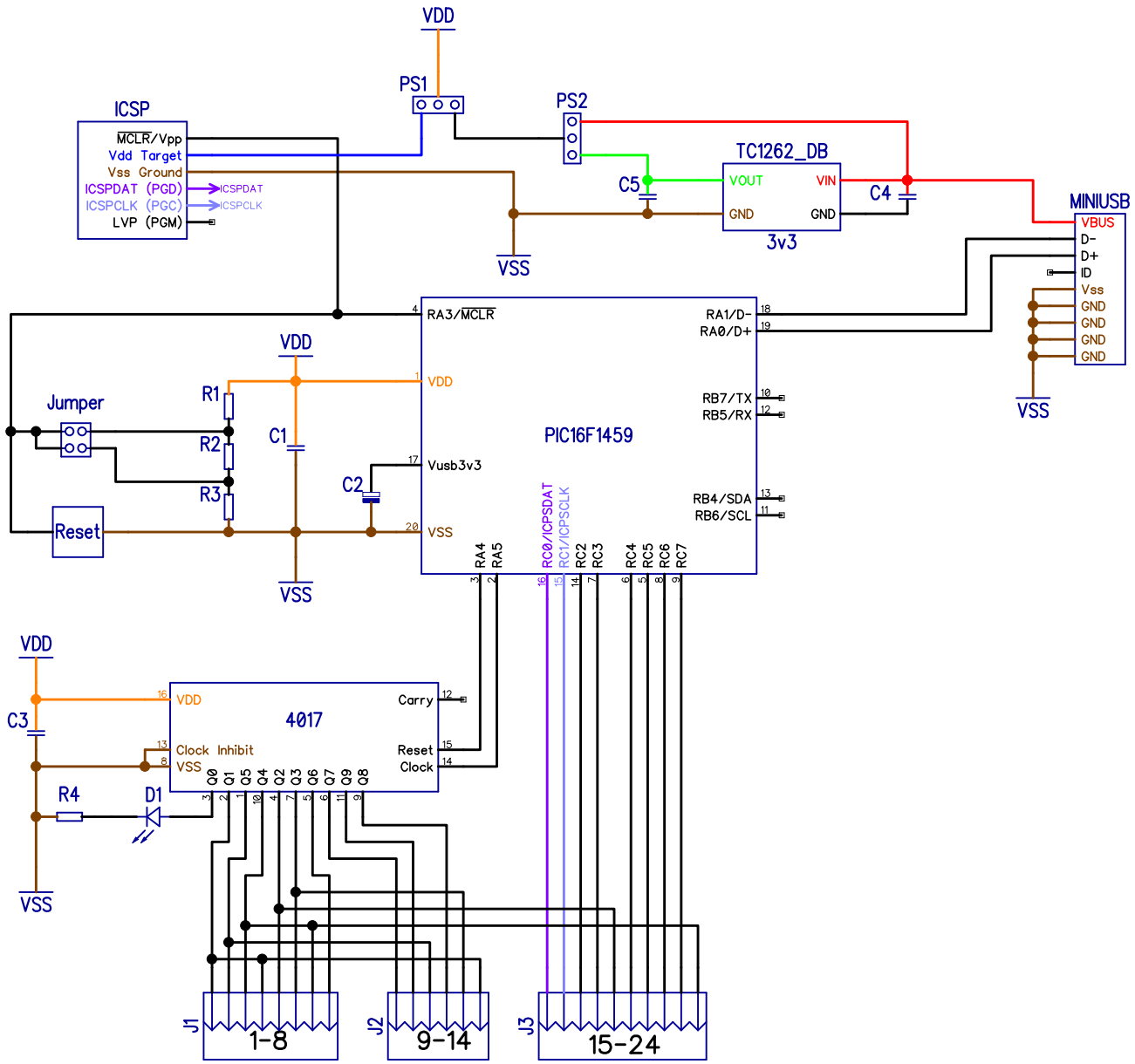

build with logic
Microblocks