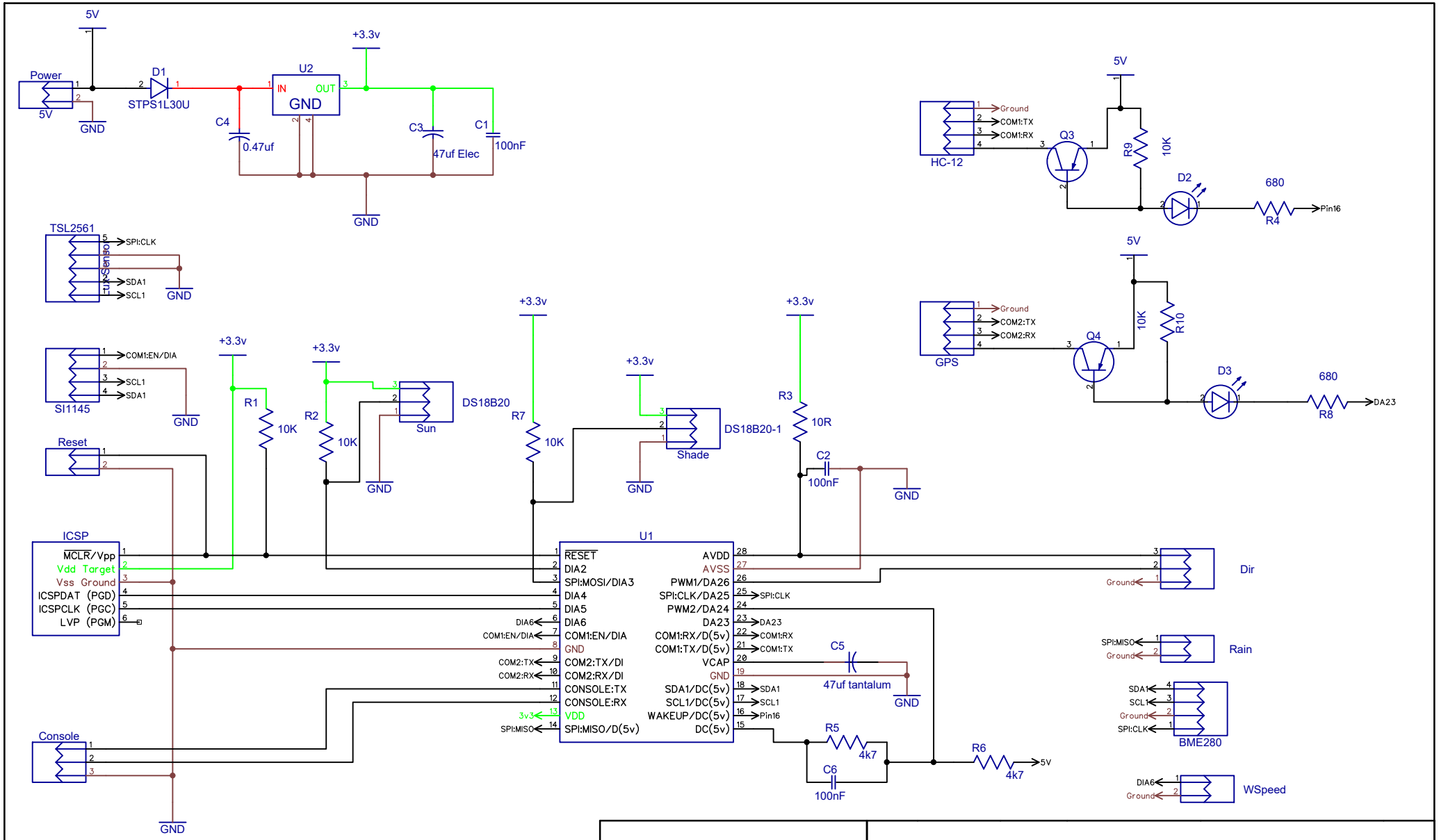

Lew247's Weather station			
Weather Station Outdoor Unit			
SIZE	FSCM NO.	DWG NO. 1	REV 26
SCALE 1/1	Ver 1	Sheet 1	