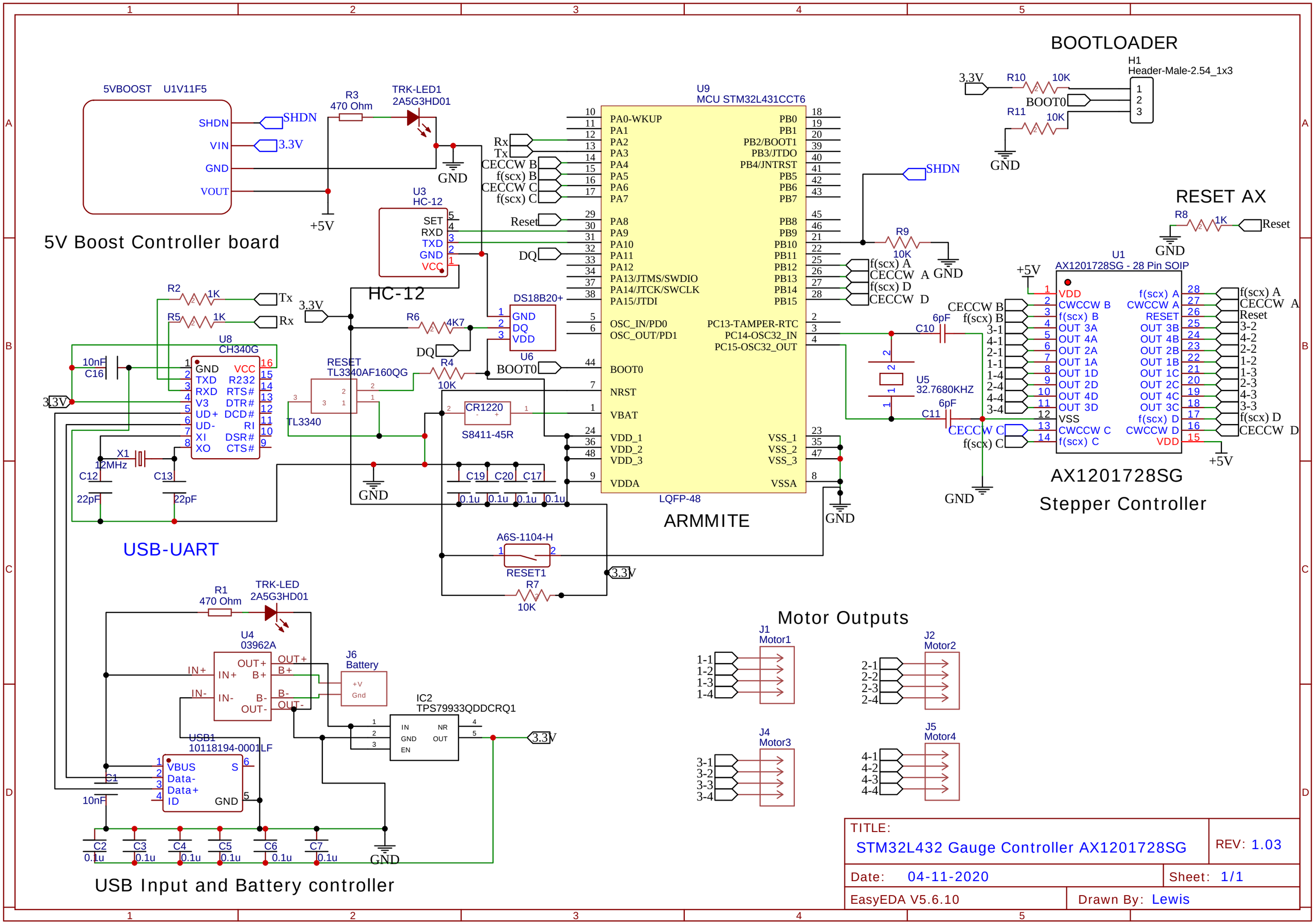


| | |
|---|---|
| TITLE: STM32L432 Gauge Controller AX1201728SG | REV: 1.03 |
| Date: 04-11-2020 | Sheet: 1/1 |
| EasyEDA V5.6.10 | Drawn By: Lewis |