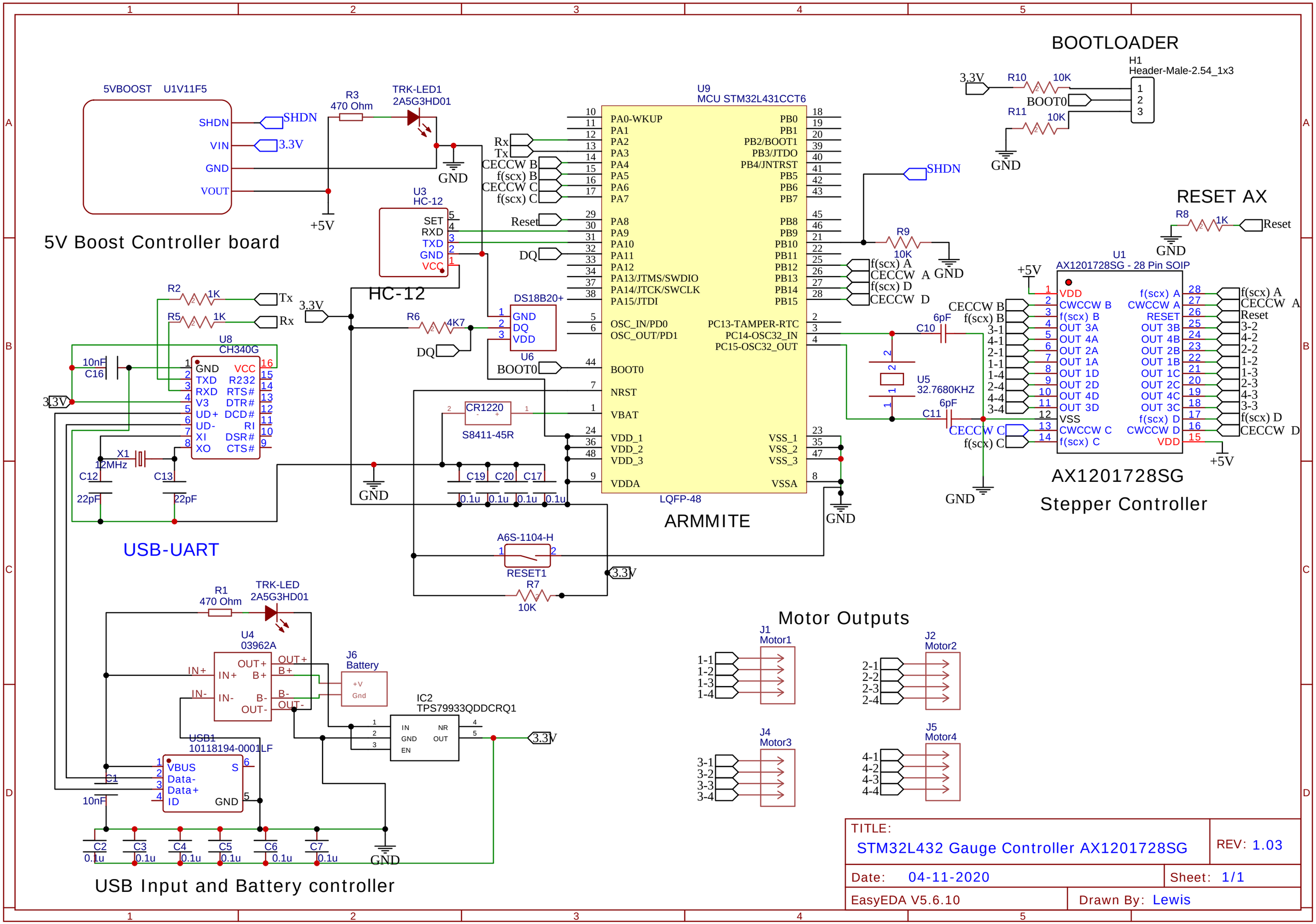

TITLE: STM32L432 Gauge Controller AX1201728SG	REV: 1.03
Date: 04-11-2020	Sheet: 1/1
EasyEDA V5.6.10	Drawn By: Lewis