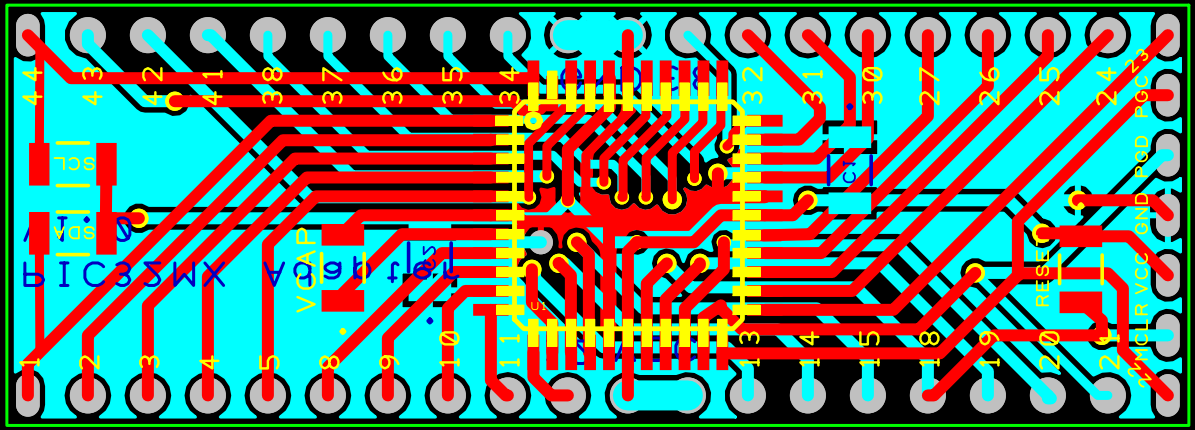
PIC33WX
VCAP
RESET
MCLR VCC GND PGD PGC