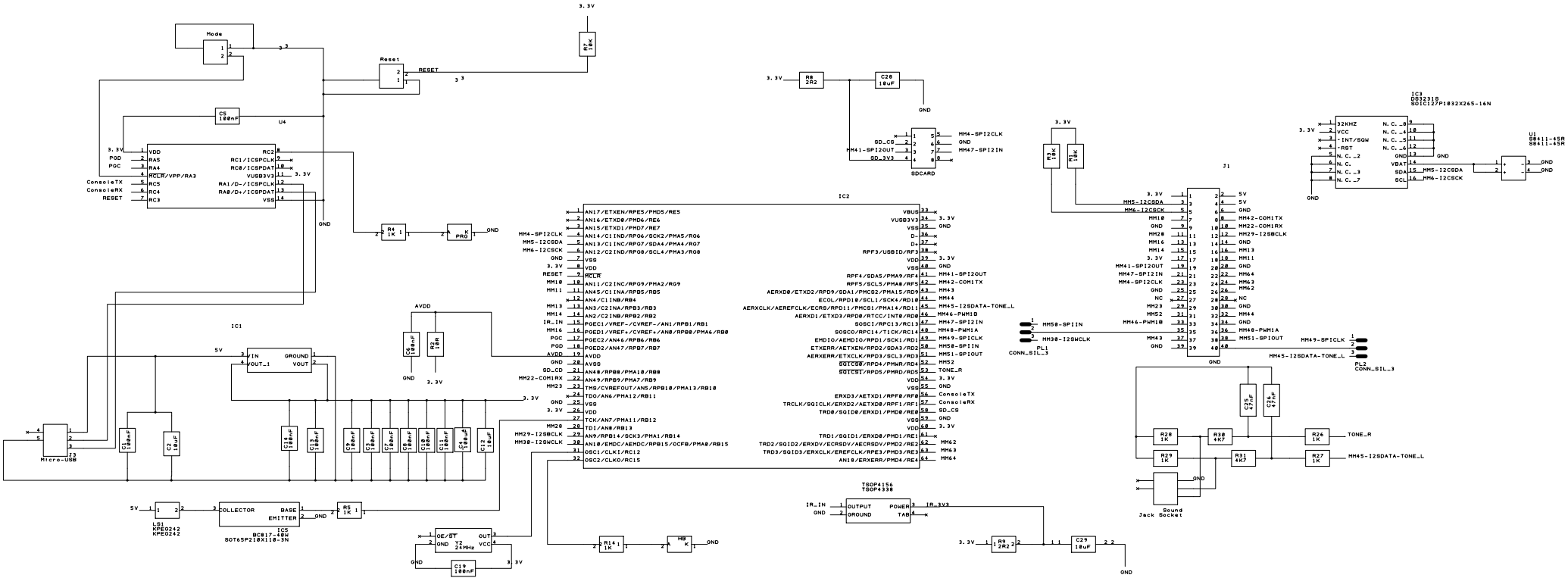
Mode
Reset
RESET
3.3V
R9 4K
C5 100nF
U4
VDD
RAS
RA4
MCLR/VPP/RA3
RC5
RC4
RC3
RC2
RC1/ICSPCLK
RC0/ICSPDAT
VUSB3V3
RA1/D-/ICSPCLK
RA0/D+/ICSPDAT
VSS
PGD
PGC
ConsoleTX
ConsoleRX
RESET
GND
R4 1K
K PRG
IC1
5V
VIN
VOUT_1
GROUND
VOUT
J3
Micro-USB
C1 100nF
C2 10uF
C14 100nF
C13 100nF
C2 100nF
C3 100nF
C4 100nF
C8 100nF
C11 100nF
C6 100nF
C12 10uF
AVDD
C9 100nF
R2 100K
LB1
KPE0242
KPE0242
COLLECTOR
BASE
EMITTER
IC5
BC817-40W
SOT65P210X110-3N
R5 1K
OE/ST
GND
Y2
24MHz
OUT
VCC
C19 100nF
R14 1K
HB K
IC2
AN17/ETXEN/RPE5/PMD5/RE5
AN16/ETXD0/PMD6/RE6
AN15/ETXD1/PMD7/RE7
AN14/C1IND/RPG6/SCK2/PMA5/RG6
AN13/C1INC/RPG7/SDA4/PMA4/RG7
AN12/C2IND/RPG8/SCL4/PMA3/RG8
VSS
VDD
MCLR
AN11/C2INC/RPG9/PMA2/RG9
AN45/C1INA/RPB5/RB5
AN4/C1INB/RB4
AN3/C2INA/RPB3/RB3
AN2/C2INB/RPB2/RB2
PGEC1/VREF-/CVREF-/AN1/RPB1/RB1
PGED1/VREF+/CVREF+/AN0/RPB0/PMA6/RB0
PGEC2/AN46/RPB6/RB6
PGED2/AN47/RPB7/RB7
AVDD
AVSS
AN48/RPB8/PMA10/RB8
AN49/RPB9/PMA7/RB9
TMS/CVREFOUT/AN5/RPB10/PMA13/RB10
TDO/AN6/PMA12/RB11
VSS
VDD
TCK/AN7/PMA11/RB12
TDI/AN8/RB13
AN9/RPB14/SCK3/PMA1/RB14
AN10/EMDC/AEMDC/RPB15/OCFB/PMA0/RB15
OSC1/CLKI/RC12
OSC2/CLKO/RC15
VBUS
VUSB3V3
VSS
D-
D+
RPF3/USBID/RF3
VDD
VSS
RPF4/SDA5/PMA9/RF4
RPF5/SCL5/PMA8/RF5
AERXD0/ETXD2/RPD9/SDA1/PMCS2/PMA15/RD9
ECOL/RPD10/SCL1/SCK4/RD10
AERXCLK/AEREFCLK/ECRS/RPD11/PMCS1/PMA14/RD11
AERXD1/ETXD3/RPD8/RTCC/INT0/RD8
SOSCI/RPC13/RC13
SOSCO/RPC14/T1CK/RC14
EMDIO/AEMDIO/RPD1/SCK1/RD1
ETXERR/AETXEN/RPD2/SDA3/RD2
AERXERR/ETXCLK/RPD3/SCL3/RD3
SQICS0/RPD4/PMWR/RD4
SQICS1/RPD5/PMRD/RD5
VDD
VSS
ERXD3/AETXD1/RPF8/RF8
TRCLK/SQICLK/ERXD2/AETXD0/RPF1/RF1
TRD0/SQID0/ERXD1/PMD8/RE8
VSS
VDD
TRD1/SQID1/ERXD0/PMD1/RE1
TRD2/SQID2/ERXDV/ECRSDV/AECRSDV/PMD2/RE2
TRD3/SQID3/ERXCLK/EREFCLK/RPE3/PMD3/RE3
AN18/ERXERR/PMD4/RE4
MM4-SPI2CLK
MM5-I2CSDA
MM6-I2CSCK
MM22-COM1RX
MM23
MM29-I2SBCLK
MM30-I2SWCLK
3.3V
TONE_R
TONE_L
ConsoleTX
ConsoleRX
SD_CS
MM62
MM63
MM64
TSOP4156
TSOP4338
IR_IN
OUTPUT
GND
GROUND
POWER
TAB
IR_3V3
R8 2R2
C28 10uF
SD_CS
MM41-SPI2OUT
SD_3V3
SDCARD
MM4-SPI2CLK
GND
MM47-SPI2IN
R3 10K
R1 10K
J1
MM5-I2CSDA
MM6-I2CSCK
MM10
GND
MM28
MM16
MM14
MM41-SPI2OUT
MM47-SPI2IN
MM4-SPI2CLK
GND
NC
MM23
MM52
MM46-PWM1B
MM43
GND
5V
MM42-COM1TX
MM29-I2SBCLK
MM13
MM11
MM44
MM63
MM62
NC
MM44
MM46-PWM1A
MM51-SPI2OUT
MM50-SPI1IN
MM30-I2SWCLK
PL1
CONN_SIL_3
MM49-SPICLK
MM45-I2SDATA-TONE_L
PL2
CONN_SIL_3
C25 47nF
C26 47nF
R28 1K
R29 1K
R30 4K7
R31 4K7
R26 1K
R27 1K
TONE_R
MM45-I2SDATA-TONE_L
Sound
Jack Socket
R9 2R2
C29 10uF
IC3
DS32318
SOIC127P1032X265-16N
32KHZ
VCC
-INT/SQW
-RST
N.C._2
N.C.
N.C._3
N.C._7
N.C._8
N.C._4
N.C._5
N.C._6
GND
VBAT
SDA
SCL
MM5-I2CSDA
MM4-I2CSCK
U1
SS411-45R
SS411-45R