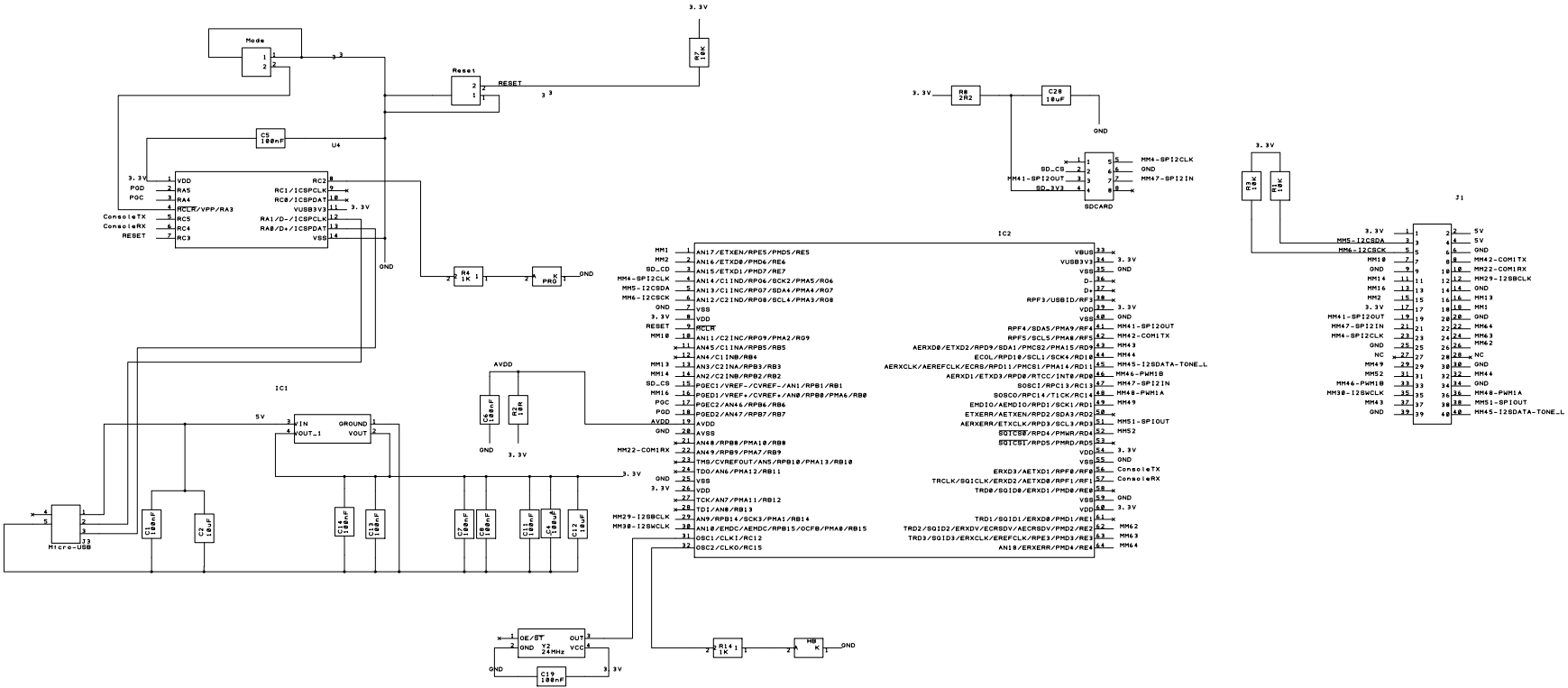

Mode
Reset
RESET
3.3V
R7 10K
C5 100nF
U4
VDD
RA5
RA4
MCLR/VPP/RA3
RC5
RC4
RC3
RC2
RC1/ICSPCLK
RC0/ICSPDAT
VUSB3V3
RA1/D-/ICSPCLK
RA0/D+/ICSPDAT
VSS
PGD
PGC
ConsoleTX
ConsoleRX
GND
R4 1K
K PRG
R8 2R2
C28 10uF
SDCARD
SD_CS
SD_3V3
MM4-SPI2CLK
MM41-SPI2OUT
MM47-SPI2IN
R3 10K
R1 10K
J1
MM5-I2CSDA
MM6-I2CSCK
MM10
MM14
MM16
MM2
MM41-SPI2OUT
MM47-SPI2IN
MM4-SPI2CLK
MM49
MM52
MM46-PWM1B
MM30-I2SWCLK
MM43
MM42-COM1TX
MM22-COM1RX
MM29-I2SBCLK
MM13
MM1
MM64
MM63
MM62
MM44
MM48-PWM1A
MM51-SPI2OUT
MM45-I2SDATA-TONE_L
IC2
MM1
MM2
SD_CD
MM4-SPI2CLK
MM5-I2CSDA
MM6-I2CSCK
MM10
MM13
MM14
SD_CS
MM16
PGC
PGD
AVDD
MM22-COM1RX
MM29-I2SBCLK
MM30-I2SWCLK
AN17/ETXEN/RPE5/PMD5/RE5
AN16/ETXD0/PMD6/RE6
AN15/ETXD1/PMD7/RE7
AN14/C1IND/RPG6/SCK2/PMA5/RG6
AN13/C1INC/RPG7/SDA4/PMA4/RG7
AN12/C2IND/RPG8/SCL4/PMA3/RG8
VDD
MCLR
AN11/C2INC/RPG9/PMA2/RG9
AN45/C1INA/RPB5/RB5
AN4/C1INB/RB4
AN3/C2INA/RPB3/RB3
AN2/C2INB/RPB2/RB2
PGEC1/VREF-/CVREF-/AN1/RPB1/RB1
PGED1/VREF+/CVREF+/AN0/RPB0/PMA6/RB0
PGEC2/AN46/RPB6/RB6
PGED2/AN47/RPB7/RB7
AVDD
AVSS
AN48/RPB8/PMA10/RB8
AN49/RPB9/PMA7/RB9
TMS/CVREFOUT/AN5/RPB10/PMA13/RB10
TDO/AN6/PMA12/RB11
VSS
VDD
TCK/AN7/PMA11/RB12
TDI/AN8/RB13
AN9/RPB14/SCK3/PMA1/RB14
AN10/EMDC/AEMDC/RPB15/OCFB/PMA0/RB15
OSC1/CLKI/RC12
OSC2/CLKO/RC15
VBUS
VUSB3V3
VSS
D-
D+
RPF3/USBID/RF3
VDD
VSS
RPF4/SDA5/PMA9/RF4
RPF5/SCL5/PMA8/RF5
AERXD0/ETXD2/RPD9/SDA1/PMCS2/PMA15/RD9
ECOL/RPD10/SCL1/SCK4/RD10
AERXCLK/AEREFCLK/ECRS/RPD11/PMCS1/PMA14/RD11
AERXD1/ETXD3/RPD0/RTCC/INT0/RD0
SOSC1/RPC13/RC13
SOSCO/RPC14/TICK/RC14
EMDIO/AEMDIO/RPD1/SCK1/RD1
ETXERR/AETXEN/RPD2/SDA3/RD2
AERXERR/ETXCLK/RPD3/SCL3/RD3
SQICS0/RPD4/PMWR/RD4
SQICS1/RPD5/PMRD/RD5
VDD
VSS
ERXD3/AETXD1/RPF0/RF0
TRCLK/SQICLK/ERXD2/AETXD0/RPF1/RF1
TRD0/SQID0/ERXD1/PMD0/RE0
VSS
VDD
TRD1/SQID1/ERXD0/PMD1/RE1
TRD2/SQID2/ERXDV/ECRSDV/AECRSDV/PMD2/RE2
TRD3/SQID3/ERXCLK/EREFCLK/RPE3/PMD3/RE3
AN18/ERXERR/PMD4/RE4
MM41-SPI2OUT
MM42-COM1TX
MM43
MM44
MM45-I2SDATA-TONE_L
MM46-PWM1B
MM47-SPI2IN
MM48-PWM1A
MM49
MM51-SPI2OUT
MM52
ConsoleTX
ConsoleRX
MM62
MM63
MM64
IC1
5V
VIN
VOUT_1
GROUND
VOUT
C6 100nF
R2 10R
C14 100nF
C13 100nF
C7 100nF
C8 100nF
C11 100nF
C4 100uF
C12 10uF
Micro-USB
J3
C1 100nF
C2 10uF
OE/ST
Y2 24MHz
OUT
VCC
C19 100nF
R14 1K
HB K