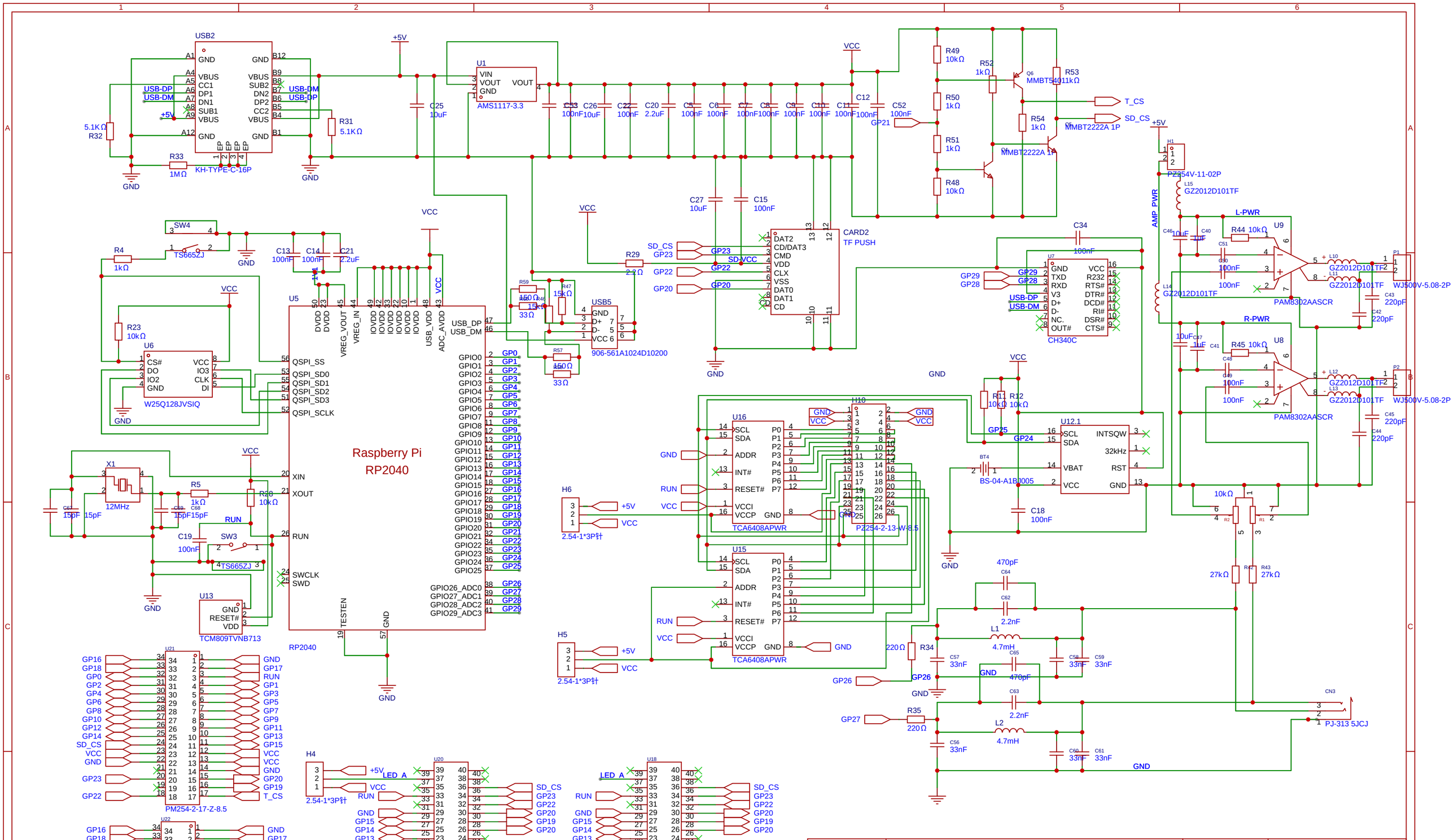

Schematic	Schematic1	Update Date	2024-02-17
		Create Date	2023-03-16
Page	P1	Part Number	JLCPCB-002
Drawed	Peter Mather	GameMiteUSB	
Reviewed	Peter Mather		
		VER	SIZE	PAGE 1 OF 1
EasyEDA		V0.1	A4	EasyEDA.com