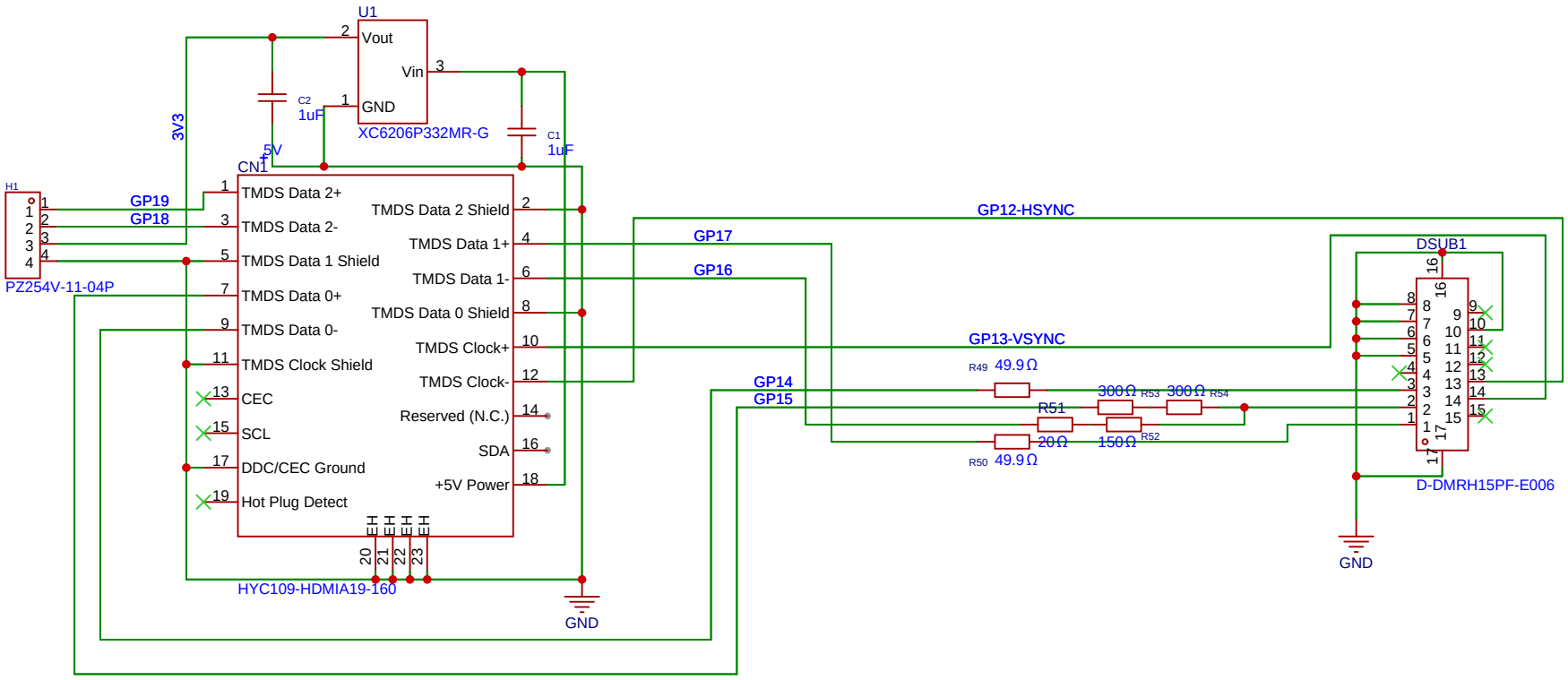

Schematic	Schematic1	Create at	2026-06-14
		Update at	2026-06-14
Board	Board1	Page	P1
Drawn		HDMI- VGA adapter	
Reviewed			
		Version	Size	Page 1 Total 1
EasyEDA		V1.0	A4	EasyEDA.com