Maximite Wood Fired Boiler Schematic - PCD

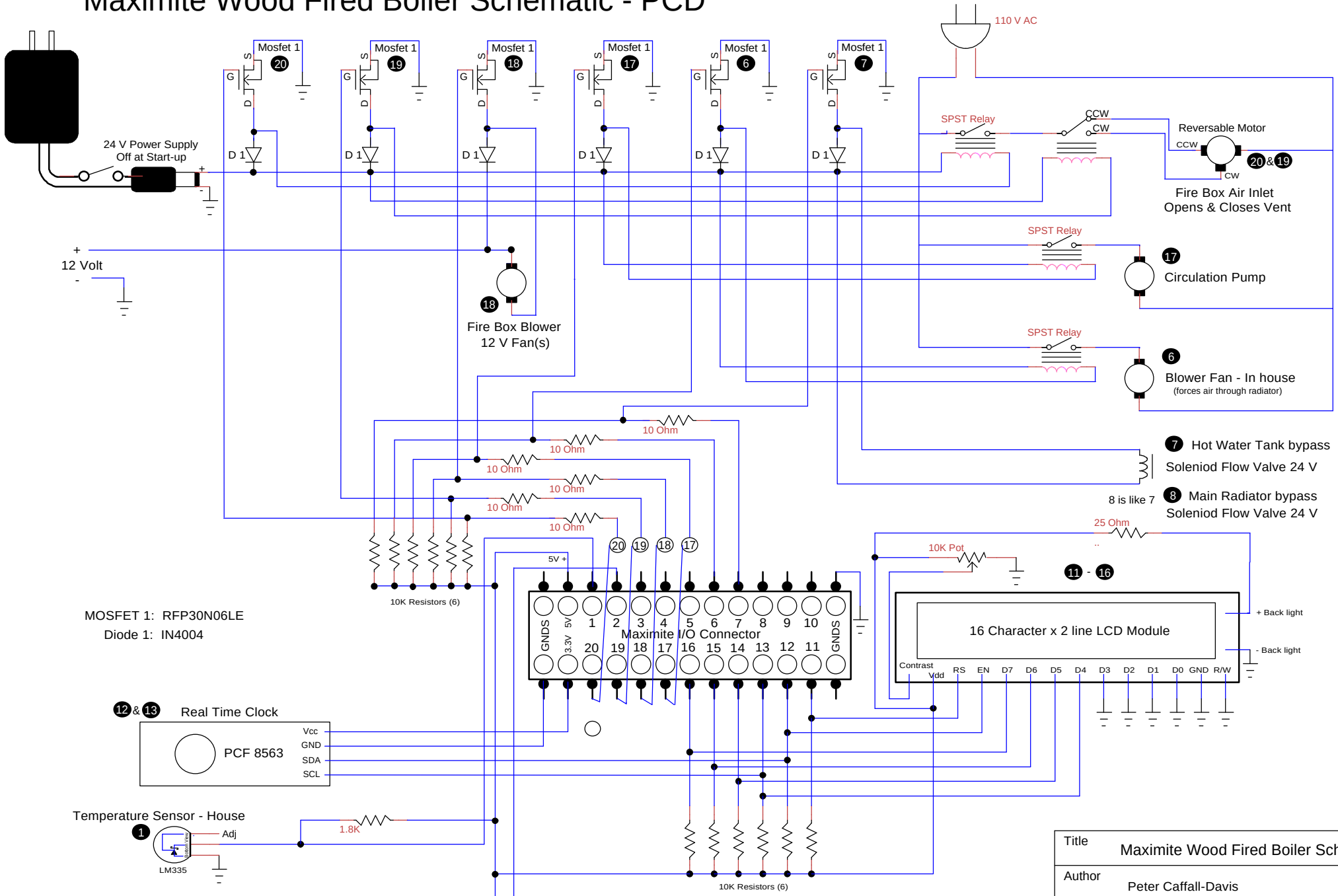

Maximite Wood Fired Boiler Schematic - PCD

Title	Maximite Wood Fired Boiler Schematic	
Author	Peter Caffall-Davis	
File	'DOCU~1\Maximite\SCHEMA~1\WOODFI~1.DSN	Doc
Revision 1.1	Date November 21, 2011	She 1