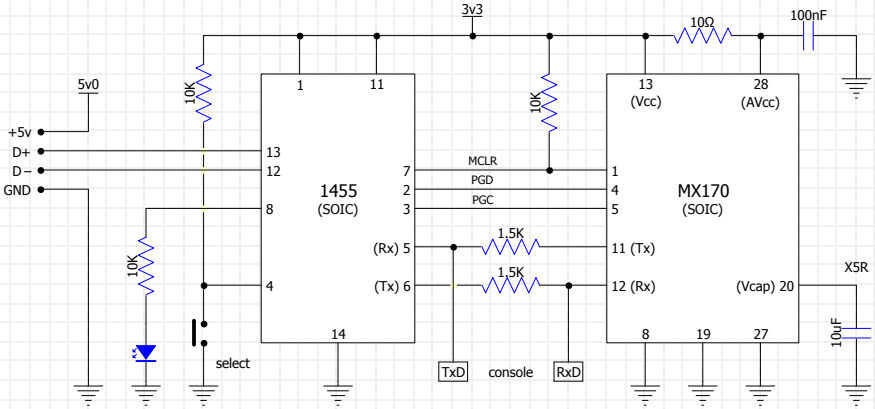

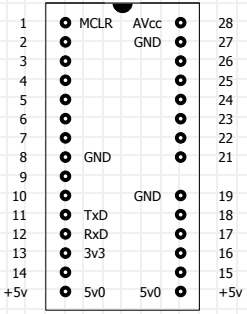

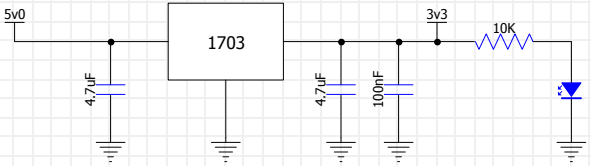

NOTE: all SDIP pins connect 1:1 to the corresponding SOIC pins except:
pin 11 - connect to 1455/5 (TxD)
pin 20 - no connection

version 1C

1 April 2017