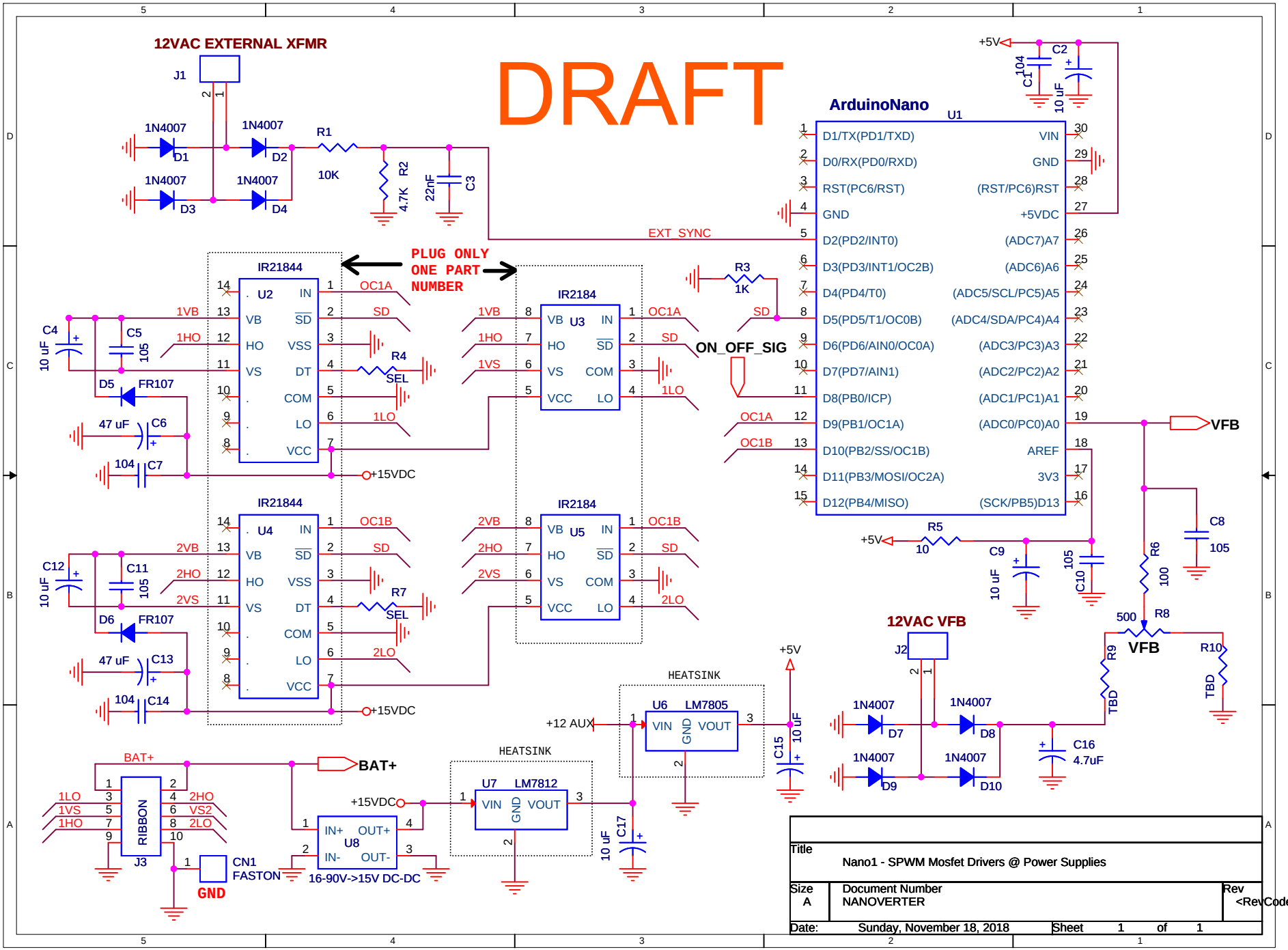
DRAFT
12VAC EXTERNAL XFMR
J1
1N4007
D1
D2
D3
D4
R1
10K
R2
4.7K
22nF
C3
EXT_SYNC
PLUG ONLY ONE PART NUMBER
IR21844
U2
IR2184
U3
U4
U5
OC1A
SD
1LO
1VB
1HO
1VS
R4
SEL
C4
10 uF
C5
105
D5
FR107
47 uF
C6
104
C7
+15VDC
OC1B
2VB
2HO
2VS
R7
2LO
C12
C11
D6
C13
C14
R3
1K
ON_OFF_SIG
ArduinoNano
U1
D1/TX(PD1/TXD)
D0/RX(PD0/RXD)
RST(PC6/RST)
GND
D2(PD2/INT0)
D3(PD3/INT1/OC2B)
D4(PD4/T0)
D5(PD5/T1/OC0B)
D6(PD6/AIN0/OC0A)
D7(PD7/AIN1)
D8(PB0/ICP)
D9(PB1/OC1A)
D10(PB2/SS/OC1B)
D11(PB3/MOSI/OC2A)
D12(PB4/MISO)
VIN
(RST/PC6)RST
+5VDC
(ADC7)A7
(ADC6)A6
(ADC5/SCL/PC5)A5
(ADC4/SDA/PC4)A4
(ADC3/PC3)A3
(ADC2/PC2)A2
(ADC1/PC1)A1
(ADC0/PC0)A0
AREF
3V3
(SCK/PB5)D13
+5V
C1
104
C2
10 uF
VFB
R5
10
C9
C10
C8
R6
100
R8
500
R9
TBD
R10
12VAC VFB
J2
D7
D8
D9
D10
C16
4.7uF
HEATSINK
U6
LM7805
+12 AUX
C15
U7
LM7812
C17
BAT+
RIBBON
J3
1LO
1VS
1HO
2HO
VS2
2LO
CN1
FASTON
GND
U8
IN+
OUT+
IN-
OUT-
16-90V->15V DC-DC
Title
Nano1 - SPWM Mosfet Drivers @ Power Supplies
Size
A
Document Number
NANOVERTER
Rev
<RevCode>
Date:
Sunday, November 18, 2018
Sheet
1
of
1