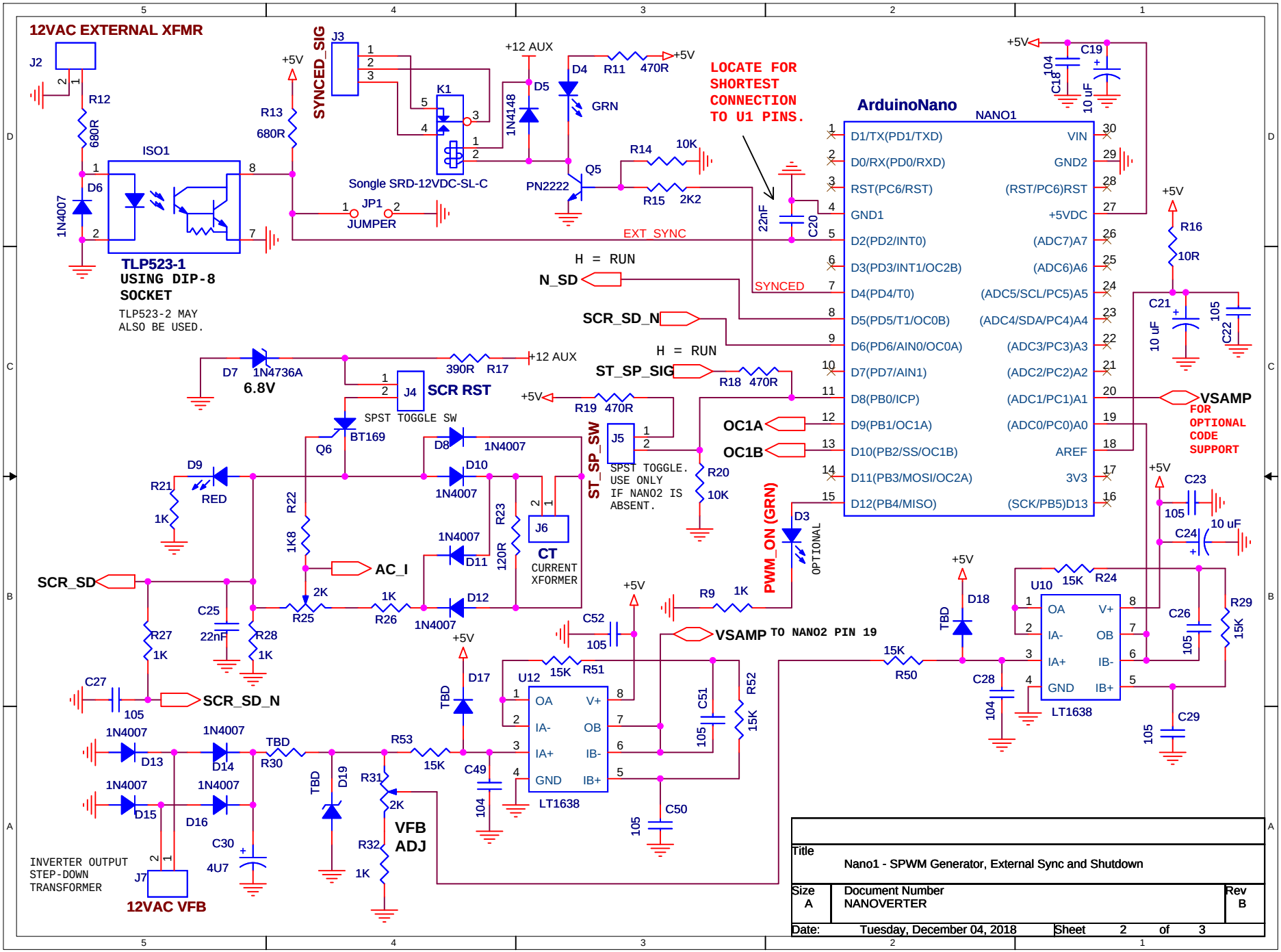

Title	Nano1 - SPWM Generator, External Sync and Shutdown	
Size A	Document Number NANOVERTER	Rev B
Date: Tuesday, December 04, 2018	Sheet 2 of 3	