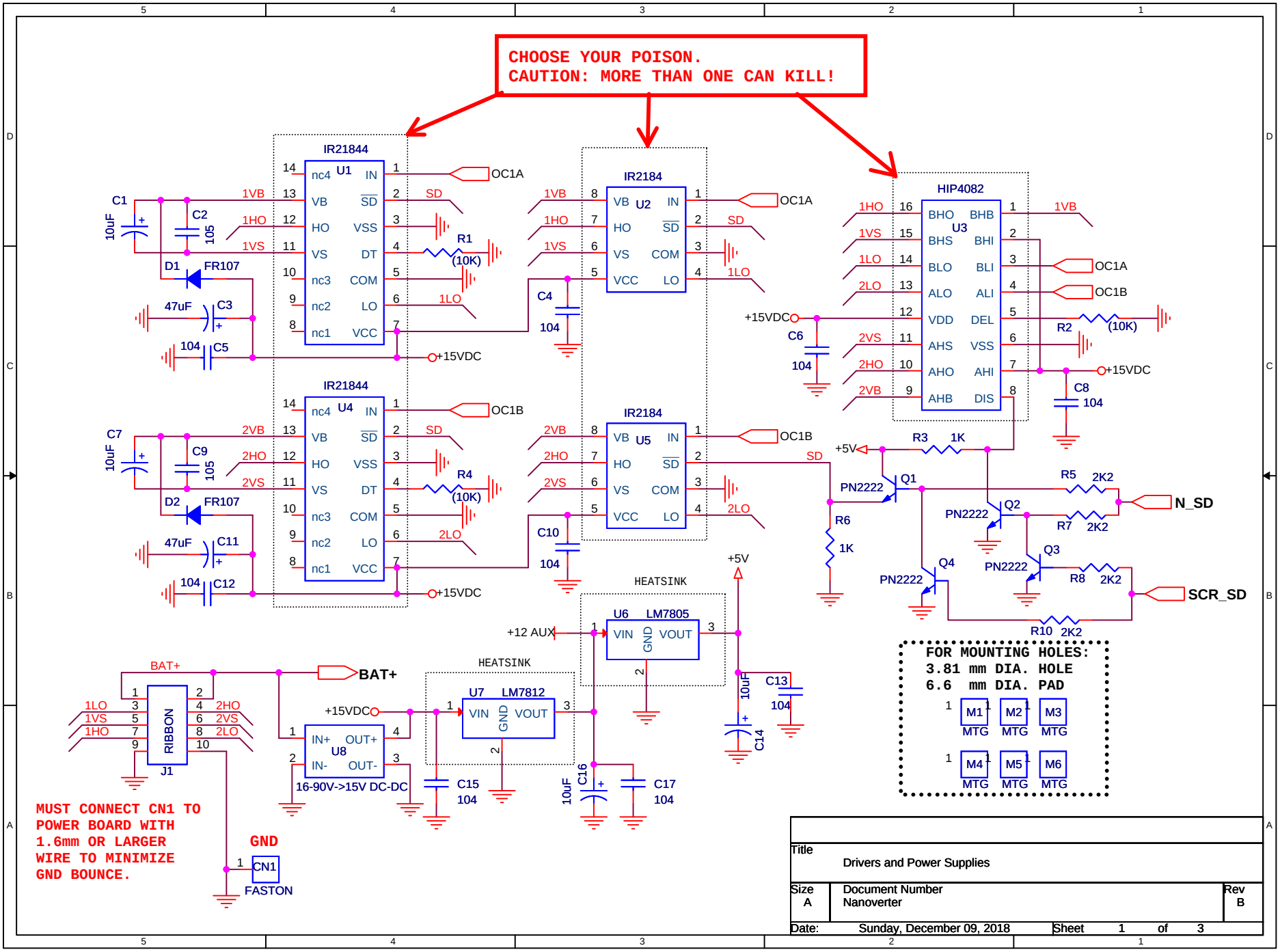

Title	Drivers and Power Supplies	
Size A	Document Number Nanoverter	Rev B
Date: Sunday, December 09, 2018	Sheet 1 of 3	

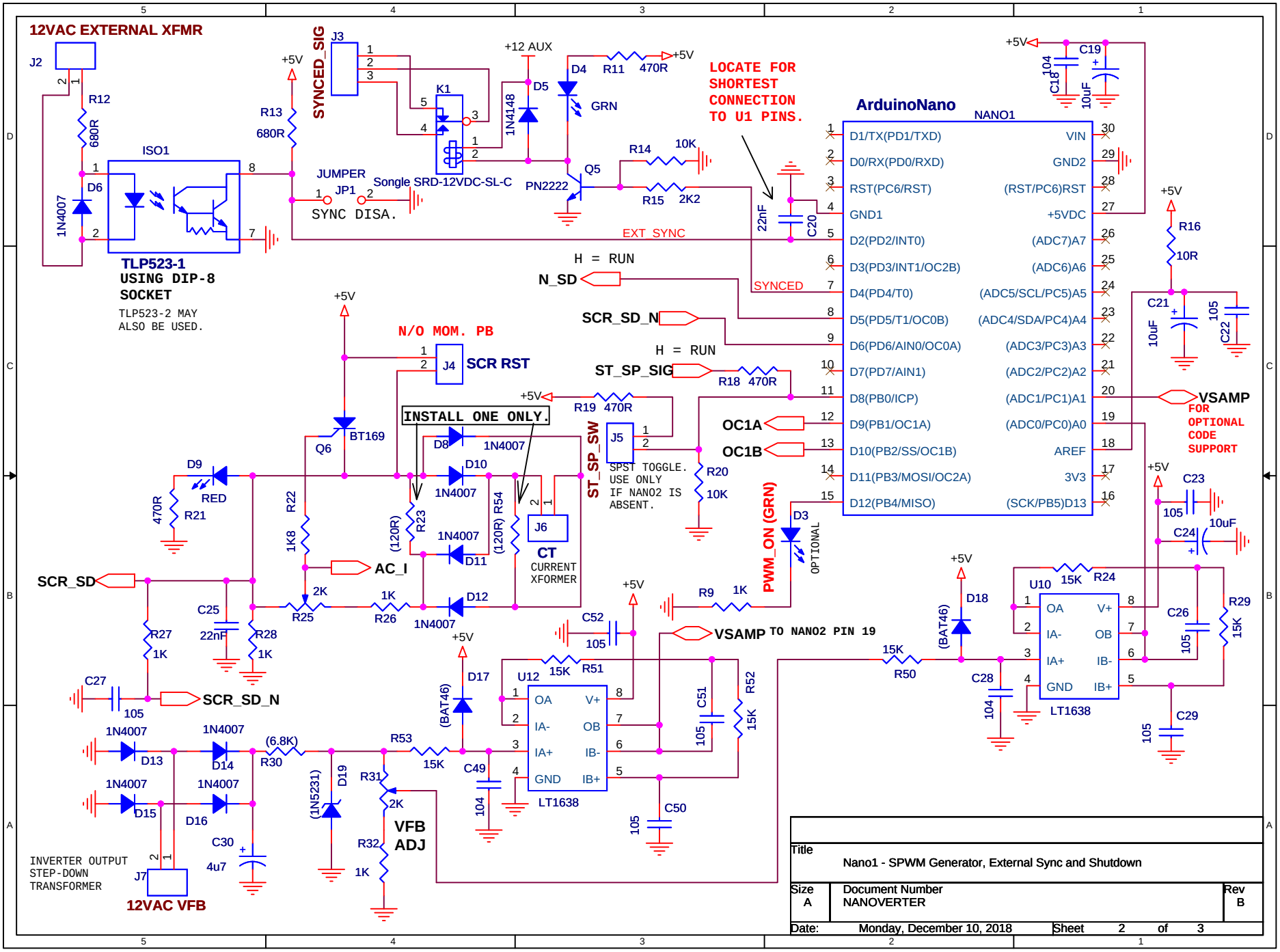
12VAC EXTERNAL XFMR
J2
R12
680R
ISO1
D6
1N4007
TLP523-1
USING DIP-8
SOCKET
TLP523-2 MAY
ALSO BE USED.
+5V
R13
680R
SYNCED_SIG
J3
JUMPER
JP1
SYNC DISA.
Songle SRD-12VDC-SL-C
K1
+12 AUX
D5
1N4148
D4
R11
470R
GRN
Q5
PN2222
R14
10K
R15
2K2
LOCATE FOR
SHORTEST
CONNECTION
TO U1 PINS.
22nF
C20
EXT_SYNC
SYNCED
H = RUN
N_SD
SCR_SD_N
H = RUN
ST_SP_SIG
R18
470R
R19
470R
OC1A
OC1B
R20
10K
ST_SP_SW
J5
SPST TOGGLE.
USE ONLY
IF NANO2 IS
ABSENT.
PWM_ON (GRN)
D3
OPTIONAL
ArduinoNano
NANO1
D1/TX(PD1/TXD)
D0/RX(PD0/RXD)
RST(PC6/RST)
GND1
D2(PD2/INT0)
D3(PD3/INT1/OC2B)
D4(PD4/T0)
D5(PD5/T1/OC0B)
D6(PD6/AIN0/OC0A)
D7(PD7/AIN1)
D8(PB0/ICP)
D9(PB1/OC1A)
D10(PB2/SS/OC1B)
D11(PB3/MOSI/OC2A)
D12(PB4/MISO)
VIN
GND2
(RST/PC6)RST
+5VDC
(ADC7)A7
(ADC6)A6
(ADC5/SCL/PC5)A5
(ADC4/SDA/PC4)A4
(ADC3/PC3)A3
(ADC2/PC2)A2
(ADC1/PC1)A1
(ADC0/PC0)A0
AREF
3V3
(SCK/PB5)D13
C18
104
C19
10uF
R16
10R
C21
10uF
C22
105
VSAMP
FOR
OPTIONAL
CODE
SUPPORT
C23
105
C24
10uF
N/O MOM. PB
J4
SCR RST
INSTALL ONE ONLY.
BT169
Q6
D8
1N4007
D10
1N4007
D11
1N4007
D12
1N4007
D9
RED
470R
R21
R22
1K8
(120R)
R23
(120R)
R54
J6
CT
CURRENT
XFORMER
AC_I
SCR_SD
R25
2K
R26
1K
C25
22nF
R27
1K
R28
1K
C27
105
SCR_SD_N
R9
1K
VSAMP TO NANO2 PIN 19
C52
105
D18
(BAT46)
U10
15K
R24
OA
IA-
IA+
GND
V+
OB
IB-
IB+
LT1638
C26
105
R29
15K
C28
104
C29
105
15K
R50
D17
(BAT46)
U12
15K
R51
LT1638
C51
105
R52
15K
C49
104
C50
105
1N4007
D13
1N4007
D14
1N4007
D15
1N4007
D16
(6.8K)
R30
(1N5231)
D19
R31
2K
R32
1K
R53
15K
VFB
ADJ
C30
4u7
INVERTER OUTPUT
STEP-DOWN
TRANSFORMER
J7
12VAC VFB
Title
Nano1 - SPWM Generator, External Sync and Shutdown
Size
A
Document Number
NANOVERTER
Rev
B
Date:
Monday, December 10, 2018
Sheet
2
of
3

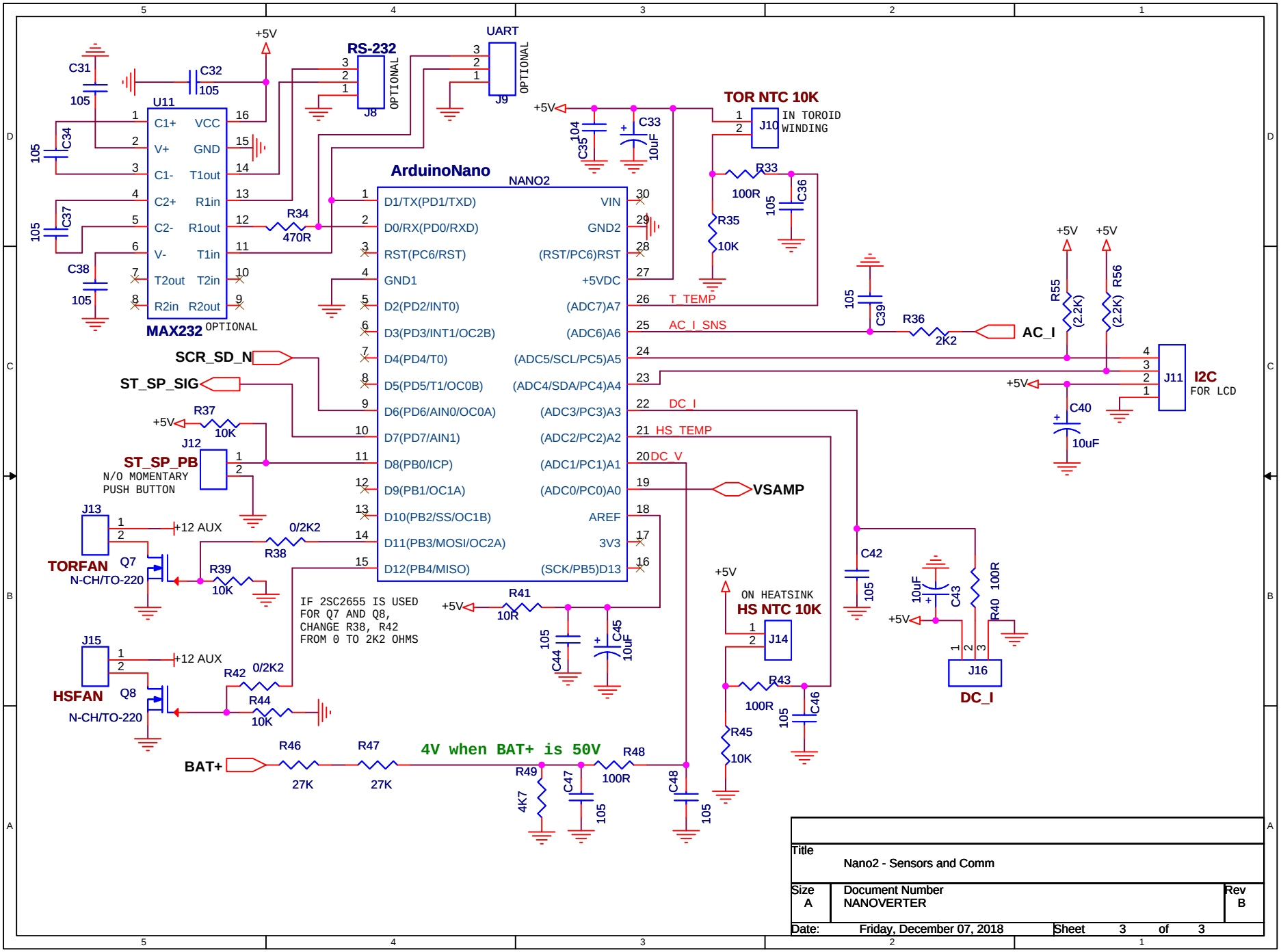
ArduinoNano
NANO2
MAX232
U11
C1+ VCC
V+ GND
C1- T1out
C2+ R1in
C2- R1out
V- T1in
T2out T2in
R2in R2out
OPTIONAL
RS-232
J8
UART
J9
TOR NTC 10K
J10
IN TOROID WINDING
D1/TX(PD1/TXD)
D0/RX(PD0/RXD)
RST(PC6/RST)
GND1
D2(PD2/INT0)
D3(PD3/INT1/OC2B)
D4(PD4/T0)
D5(PD5/T1/OC0B)
D6(PD6/AIN0/OC0A)
D7(PD7/AIN1)
D8(PB0/ICP)
D9(PB1/OC1A)
D10(PB2/SS/OC1B)
D11(PB3/MOSI/OC2A)
D12(PB4/MISO)
VIN
GND2
(RST/PC6)RST
+5VDC
(ADC7)A7
(ADC6)A6
(ADC5/SCL/PC5)A5
(ADC4/SDA/PC4)A4
(ADC3/PC3)A3
(ADC2/PC2)A2
(ADC1/PC1)A1
(ADC0/PC0)A0
AREF
3V3
(SCK/PB5)D13
T_TEMP
AC_I_SNS
DC_I
HS_TEMP
DC_V
SCR_SD_N
ST_SP_SIG
ST_SP_PB
N/O MOMENTARY PUSH BUTTON
J12
J13
TORFAN
Q7
N-CH/TO-220
J15
HSFAN
Q8
N-CH/TO-220
+12 AUX
IF 2SC2655 IS USED FOR Q7 AND Q8, CHANGE R38, R42 FROM 0 TO 2K2 OHMS
BAT+
4V when BAT+ is 50V
VSAMP
ON HEATSINK
HS NTC 10K
J14
AC_I
I2C
FOR LCD
J11
DC_I
J16
Title
Nano2 - Sensors and Comm
Size A
Document Number NANOVERTER
Rev B
Date: Friday, December 07, 2018
Sheet 3 of 3