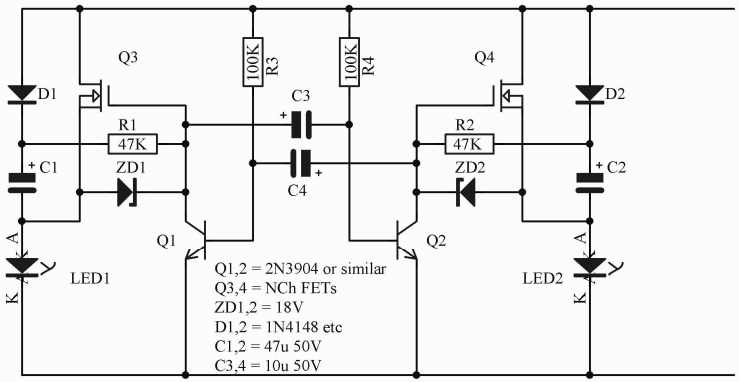

Title		
Size A4	Number	Revision
Date: 1/06/2021	Sheet of	
File: D:\Altium\LED Flash.SchDoc	Drawn By:	