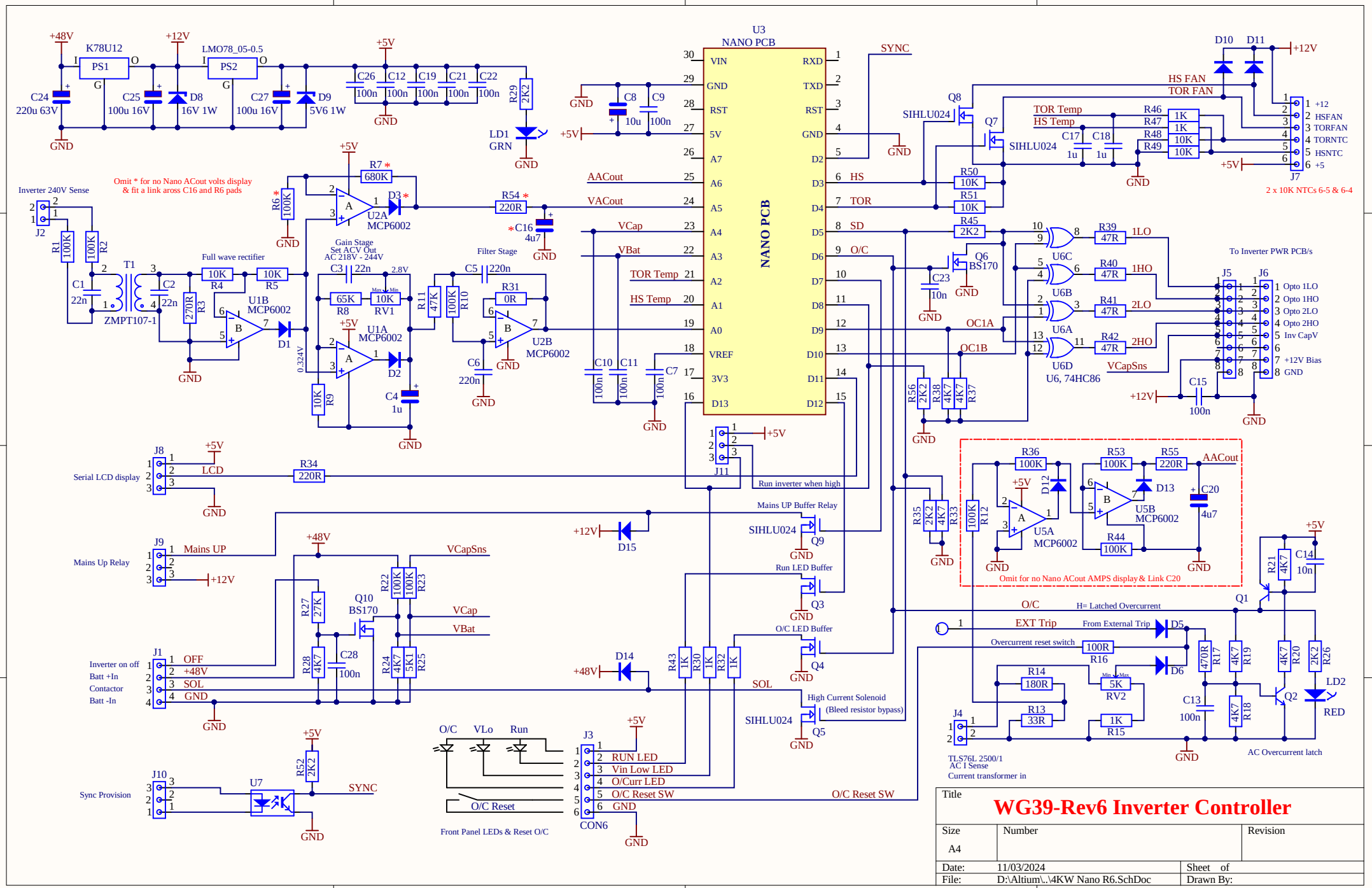
U3
NANO PCB
NANO PCB
VIN
GND
RST
5V
A7
A6
A5
A4
A3
A2
A1
A0
VREF
3V3
D13
RXD
TXD
RST
GND
D2
D3
D4
D5
D6
D7
D8
D9
D10
D11
D12
SYNC
HS
TOR
SD
O/C
OC1A
OC1B
VCapSns
AACout
VACout
VCap
VBat
TOR Temp
HS Temp
K78U12
PS1
LMO78_05-0.5
PS2
+48V
+12V
+5V
GND
C24 220u 63V
C25 100u 16V
D8 16V 1W
C27 100u 16V
D9 5V6 1W
C26 100n
C12 100n
C19 100n
C21 100n
C22 100n
R29 2K2
LD1 GRN
C8 10u
C9 100n
Inverter 240V Sense
J2
R1 100K
R2 100K
C1 22n
C2 22n
T1
ZMPT107-1
Full wave rectifier
R4 10K
R5 10K
R3 270R
U1B MCP6002
D1
0.324V
Omit * for no Nano ACout volts display
& fit a link aross C16 and R6 pads
R6 100K
R7 680K
U2A MCP6002
D3
Gain Stage
Set ACV Out
AC 218V - 244V
C3 22n
2.8V
R8 65K
RV1 10K
U1A MCP6002
D2
C4 1u
R9 10K
R54 220R
C16 4u7
Filter Stage
C5 220n
R31 0R
R11 47K
R10 100K
U2B MCP6002
C6 220n
C10 100n
C11 100n
C7 100n
Q8 SIHLU024
Q7 SIHLU024
TOR Temp
HS Temp
C17 1u
C18 1u
R46 1K
R47 1K
R48 10K
R49 10K
R50 10K
R51 10K
R45 2K2
Q6 BS170
C23 10n
D10
D11
HS FAN
TOR FAN
J7
2 x 10K NTCs 6-5 & 6-4
R39 47R 1LO
R40 47R 1HO
R41 47R 2LO
R42 47R 2HO
U6C
U6B
U6A
U6D
U6, 74HC86
To Inverter PWR PCB/s
J5
J6
Opto 1LO
Opto 1HO
Opto 2LO
Opto 2HO
Inv CapV
+12V Bias
GND
C15 100n
R56 2K2
R38 4K7
R37 4K7
J8
Serial LCD display
LCD
R34 220R
J11
Run inverter when high
Mains UP Buffer Relay
SIHLU024
Q9
D15
J9
Mains Up Relay
Mains UP
Run LED Buffer
Q3
R35 2K2
R33 4K7
R36 100K
R53 100K
R55 220R
D12
D13
U5A MCP6002
U5B MCP6002
C20 4u7
R44 100K
R12 100K
Omit for no Nano ACout AMPS display & Link C20
R22 100K
R23 100K
R27 27K
Q10 BS170
R28 4K7
C28 100n
R24 4K7
R25 5K1
O/C LED Buffer
Q4
D14
R43 1K
R30 1K
R32 1K
SOL
High Current Solenoid
(Bleed resistor bypass)
Q5
Inverter on off
Batt +In
Contactor
Batt -In
J1
OFF
+48V
SOL
GND
O/C
H= Latched Overcurrent
EXT Trip
From External Trip
D5
Overcurrent reset switch
R16 100R
D6
R14 180R
R13 33R
RV2 5K
R15 1K
R17 470R
R19 4K7
R18 4K7
C13 100n
R21 4K7
C14 10n
Q1
R20 4K7
R26 2K2
Q2
LD2 RED
J4
TLS76L 2500/1
AC I Sense
Current transformer in
AC Overcurrent latch
J10
Sync Provision
U7
R52 2K2
O/C
VLo
Run
J3
RUN LED
Vin Low LED
O/C Curr LED
O/C Reset SW
GND
CON6
O/C Reset
Front Panel LEDs & Reset O/C
O/C Reset SW
Title
WG39-Rev6 Inverter Controller
Size
A4
Number
Revision
Date: 11/03/2024
Sheet of
File: D:\Altium\..\4KW Nano R6.SchDoc
Drawn By: