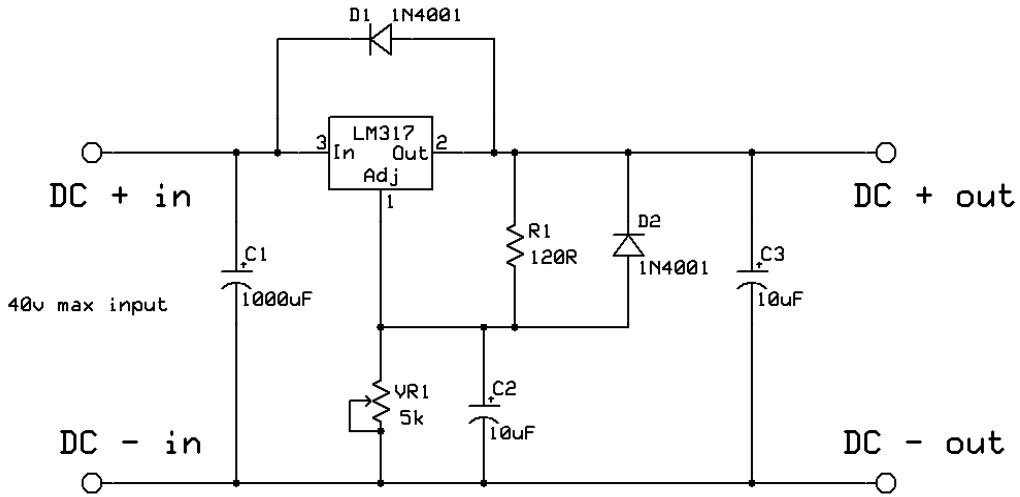

www.thebackshed.com		
317 variable power supply		
GIZMO	Rev 1.0 12/05/2010	Page # or name